LED PANEL

Wraysbury

Wraysbury Backlit Panel - 600x600 White

Product code **431271**



Power	**30W**
Luminous flux	**3,450 lm**
Efficacy	**115 lm/W**
Colour temperature	**4000K**
Beam angle	**85°**
Protection	**IP40 · IK03**
Lifetime L70	**50,000 h**
Warranty	**5 years**

Introduction

4000K, IP40, up to 120 lm/W.

Features

- Backlit Panel
- Connector supplied
- 5 Year Product Warranty

Certification and options

UKCA marked

CE marked

Recommended applications

Offices, classrooms, healthcare, retail



Specification

Optical

Luminous flux	**3,450 lm**
Efficacy	**115 lm/W**
Colour temperature	**4000K**
Colour rendering	**Ra 80**
Beam angle	**85°**
Glare (UGR)	**<19**
Flicker	**Flicker Free**
Efficacy at 4000K	**115 lm/W**
R9 at 4000K	**80.0**
Flicker rate	**<2.0**

Electrical

Power	**30W**
Supply voltage	**220-240V AC**
Frequency	**50 Hz / 60 Hz**
Driver type	**CC**
Driver	**Lifud**
Dimming	**Fixed**
Power factor	**0.9**
Inrush current	**60 A**
Forward voltage	**33-40 V**
LED manufacturer	**Shenzen Jingrui**
Max. per 10A B-curve MCB	**41**
Max. per 13A B-curve MCB	**68**
Max. per 16A B-curve MCB	**25**
Max. per 20A B-curve MCB	**40**

Lifetime and warranty

Lifetime L70	**50,000 h**
Energy class	**C**
Warranty	**5 years**
Replaceable driver	**User**
Replaceable light source	**Professional**

Construction

Ingress protection	**IP40**
Impact resistance	**IK03**
Electrical class	**Class II**
Body	**Steel**
Diffuser	**Polystyrene**
Diffuser fire rating	**TP(a)**
Colour (RAL)	**RAL 9003**
Location	**Internal**
Cut-out (mm)	**590 x 590**
Dimensions (L x W x H)	**595 x 595 x 28 mm**
Weight	**1.662 kg**

Installation

Connection	**Push Terminal**
Ambient temperature	**0 to +40 °C**

Values are nominal. Luminous flux and efficacy are for the complete luminaire. Specifications may change without notice; the product page always carries the latest version.

Dimensions

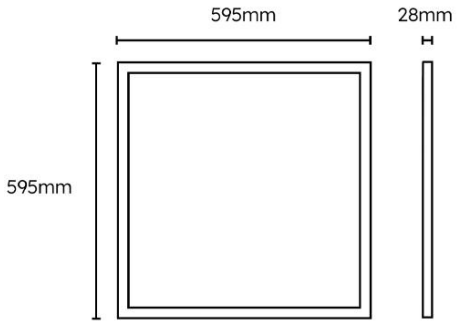

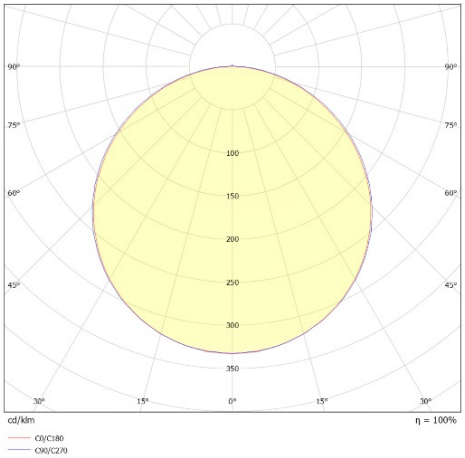

Ordering information · Wraysbury 600x600

CODE	DESCRIPTION	POWER	LUMINOUS FLUX	EFFICACY	CCT	BEAM
431272	Wraysbury Backlit Panel - 600x600 White	28W	3,350	120 lm/W	3000K / 4000K / 6000K	85°
431270	Wraysbury Backlit Panel - 600x600 White	30W	3,300	110 lm/W	4000K	110°
431270-MP	Wraysbury Backlit Panel - 600x600 White 10 Pack	30W	3,300	110 lm/W	4000K	110°
431271	**Wraysbury Backlit Panel - 600x600 White**	**30W**	**3,450**	**115 lm/W**	**4000K**	**85°**
431271-MP	Wraysbury Backlit Panel - 600x600 White	30W	3,450	115 lm/W	4000K	85°

Compatible modules and accessories

	CODE	DESCRIPTION
	430971	Grafham 2W E-SEL3 Emergency Conversion Pack 20-55V DC 130mA LiFePO4 3.2V DC 3.2 mAh Loch4 Connector
	430269	LED Multi Dimmable Driver 24W-42W (Push Dim, 1-10V & DALI2) DC30-40V 600-1050mA 200-240V Flicker Free
	430266	LED Triac Dimmable Driver 18W-32W DC30-40V 200-240V Flicker Free
	431271-MP	Wraysbury Backlit Panel 600x600 30W 4000K White UGR TP(a) 10 Pack
	430147	Wraysbury Tool Free Pattress Kit 600x600x70mm

DOWNLOADS

Photometric files (LDT), installation instructions and the latest datasheet are on the product page:

www.lumineux.co.uk/shop/431271-wraysbury-backlit-panel-600x600-30w-4000k-white-ugr-tp-a-54912

WARRANTY AND SUPPORT

5 years warranty. Terms at www.lumineux.co.uk/product-warranty-on-site-warranty.

Free lighting design and technical support: 01507 328031, support@lumineux.co.uk