LED PANEL

Wraysbury

Wraysbury Backlit Panel - 600x600 White

Product code **431272**



Power	**28W**
Luminous flux	**3,350 lm**
Efficacy	**120 lm/W**
Colour temperature	**3000K / 4000K / 6000K**
Beam angle	**85°**
Protection	**IP40 · IK03**
Lifetime L70	**50,000 h**
Warranty	**5 years**

Introduction

4000K, IP40, up to 120 lm/W.

Features

- Backlit Panel
- Connector supplied
- 5 Year Product Warranty

Certification and options

UKCA marked

CE marked

Recommended applications

Offices, classrooms, healthcare, retail



Specification

Optical

Luminous flux	**3,350 lm**
Efficacy	**120 lm/W**
Colour temperature	**3000K / 4000K / 6000K**
Colour selection	**3CCT**
Colour rendering	**Ra 80**
Beam angle	**85°**
Glare (UGR)	**<19**
Flicker	**Flicker Free**
Efficacy at 4000K	**120 lm/W**
R9 at 4000K	**80.0**
Flicker rate	**<2.0**

Electrical

Power	**28W**
Supply voltage	**220-240V AC**
Frequency	**50 Hz / 60 Hz**
Driver type	**CC**
Driver	**Lifud**
Dimming	**Fixed**
Power factor	**0.9**
Inrush current	**60 A**
Forward voltage	**33-40 V**
LED manufacturer	**Shenzen Jingrui**
Max. per 10A B-curve MCB	**41**
Max. per 13A B-curve MCB	**68**
Max. per 16A B-curve MCB	**25**
Max. per 20A B-curve MCB	**40**

Lifetime and warranty

Lifetime L70	**50,000 h**
Energy class	**C**
Warranty	**5 years**
Replaceable driver	**User**
Replaceable light source	**Professional**

Construction

Ingress protection	**IP40**
Impact resistance	**IK03**
Electrical class	**Class II**
Body	**Steel**
Diffuser	**Polystyrene**
Diffuser fire rating	**TP(a)**
Colour (RAL)	**RAL 9003**
Location	**Internal**
Cut-out (mm)	**590 x 590**
Dimensions (L x W x H)	**595 x 595 x 28 mm**

Installation

Connection	**Loch3 Quick Connector**
Ambient temperature	**0 to +40 °C**

Values are nominal. Luminous flux and efficacy are for the complete luminaire. Specifications may change without notice; the product page always carries the latest version.

Dimensions

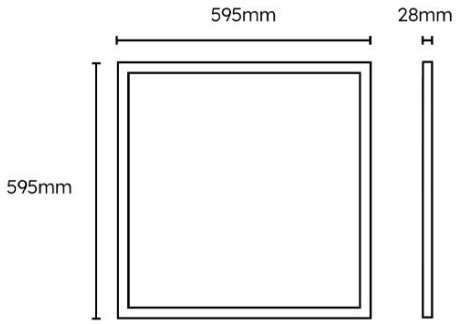

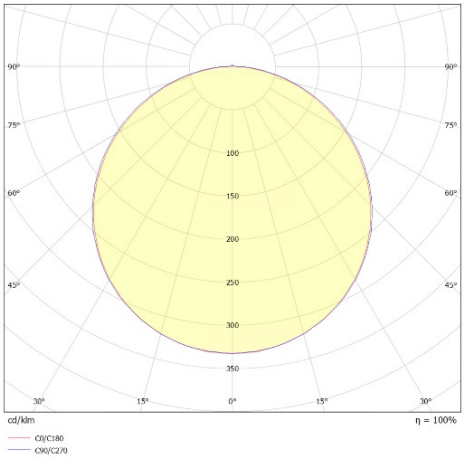

Ordering information · Wraysbury 600x600

CODE	DESCRIPTION	POWER	LUMINOUS FLUX	EFFICACY	CCT	BEAM
431272	**Wraysbury Backlit Panel - 600x600 White**	**28W**	**3,350**	**120 lm/W**	**3000K / 4000K / 6000K**	**85°**
431270	Wraysbury Backlit Panel - 600x600 White	30W	3,300	110 lm/W	4000K	110°
431270-MP	Wraysbury Backlit Panel - 600x600 White 10 Pack	30W	3,300	110 lm/W	4000K	110°
431271	Wraysbury Backlit Panel - 600x600 White	30W	3,450	115 lm/W	4000K	85°
431271-MP	Wraysbury Backlit Panel - 600x600 White	30W	3,450	115 lm/W	4000K	85°

Compatible modules and accessories

	CODE	DESCRIPTION
	430971	Grafham 2W E-SEL3 Emergency Conversion Pack 20-55V DC 130mA LiFePO4 3.2V DC 3.2 mAh Loch4 Connector
	430269	LED Multi Dimmable Driver 24W-42W (Push Dim, 1-10V & DALI2) DC30-40V 600-1050mA 200-240V Flicker Free
	430266	LED Triac Dimmable Driver 18W-32W DC30-40V 200-240V Flicker Free
	430147	Wraysbury Tool Free Pattress Kit 600x600x70mm

DOWNLOADS

Photometric files (LDT), installation instructions and the latest datasheet are on the product page:

www.lumineux.co.uk/shop/431272-wraysbury-backlit-panel-600x600-28w-3cct-white-ugr-tp-a-55011

WARRANTY AND SUPPORT

5 years warranty. Terms at www.lumineux.co.uk/product-warranty-on-site-warranty.

Free lighting design and technical support: 01507 328031, support@lumineux.co.uk