FLOODLIGHT

# Melbury Plus

Melbury Plus - Black Plug & Play

Product code **431379**

| | |
|---|---|
| Power | **50W** |
| Luminous flux | **6,250 lm** |
| Efficacy | **125 lm/W** |
| Colour temperature | **4000K** |
| Beam angle | **100°** |
| Protection | **IP65 · IK06** |
| Lifetime L70 | **50,000 h** |
| Warranty | **3 years** |




## Introduction

4000K, IP65, up to 125 lm/W.

## Features

- IP65 rated floodlight
- Diecast aluminium body
- Angled bracket for ease of installation
- Supplied with 1M prewired H05RN-F cable
- PIR Override via remote

## Certification and options

Plug & Play enabled · Ingress protection · UKCA marked · CE marked

## Recommended applications

Yards, car parks, loading areas, building facades





# Specification

## Optical

| | |
|---|---|
| Luminous flux | **6,250 lm** |
| Efficacy | **125 lm/W** |
| Colour temperature | **4000K** |
| Colour rendering | **Ra 80** |
| Beam angle | **100°** |

## Electrical

| | |
|---|---|
| Power | **50W** |
| Supply voltage | **220-240V AC** |
| Frequency | **50 Hz / 60 Hz** |
| Driver type | **CC** |
| Driver | **Lumineux** |
| Dimming | **Fixed** |

## Lifetime and warranty

| | |
|---|---|
| Lifetime L70 | **50,000 h** |
| Energy class | **C** |
| Warranty | **3 years** |
| Replaceable driver | **Professional** |
| Replaceable light source | **Professional** |

## Construction

| | |
|---|---|
| Ingress protection | **IP65** |
| Impact resistance | **IK06** |
| Electrical class | **Class I** |
| Body | **Aluminium** |
| Diffuser | **Glass** |
| Colour (RAL) | **RAL 7224** |
| Location | **Internal** |
| Dimensions (L x W x H) | **202 x 180 x 57 mm** |

## Installation

| | |
|---|---|
| Connection | **1m H05RN-F** |
| Ambient temperature | **-20 to +30 °C** |

Values are nominal. Luminous flux and efficacy are for the complete luminaire. Specifications may change without notice; the product page always carries the latest version.

## Dimensions

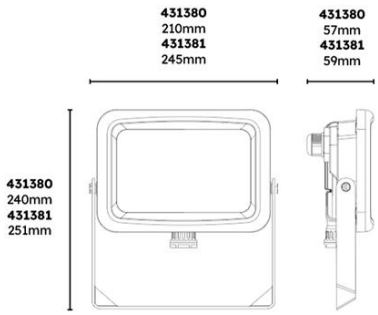


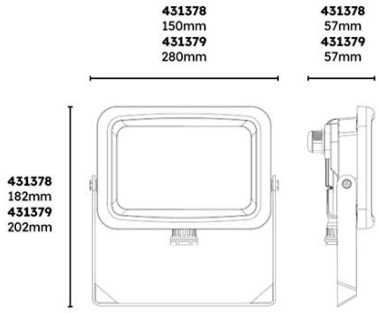


## Ordering information · Melbury Plus

| CODE | DESCRIPTION | POWER | LUMINOUS FLUX | EFFICACY | CCT | BEAM |
|---|---|---|---|---|---|---|
| 431376 | Melbury Plus - Black Plug & Play | 10W | 1,250 | 125 lm/W | 4000K | 100° |
| 431377 | Melbury Plus - Black Plug & Play | 20W | 2,500 | 125 lm/W | 4000K | 100° |
| 431378 | Melbury Plus - Black Plug & Play | 30W | 3,750 | 125 lm/W | 4000K | 100° |
| **431379** | **Melbury Plus - Black Plug & Play** | **50W** | **6,250** | **125 lm/W** | **4000K** | **100°** |
| 431380 | Melbury Plus - Black Plug & Play | 70W | 8,750 | 125 lm/W | 4000K | 100° |
| 431381 | Melbury Plus - Black Plug & Play | 100W | 12,500 | 125 lm/W | 4000K | 100° |

## Compatible modules and accessories

| | CODE | DESCRIPTION |
|---|---|---|
|  | 431382 | Melbury Plus Floodlight Plug & Play Dusk to Dawn Sensor |
|  | 431383 | Melbury Plus Floodlight Plug & Play PIR Sensor |

### DOWNLOADS

Photometric files (LDT), installation instructions and the latest datasheet are on the product page:

**www.lumineux.co.uk/shop/431379-melbury-plus-floodlight-50w-4000k-ip65-black-plug-play-55052**

### WARRANTY AND SUPPORT

3 years warranty. Terms at www.lumineux.co.uk/product-warranty-on-site-warranty.

Free lighting design and technical support: 01507 328031, support@lumineux.co.uk