LED BATTEN

Holywell Plus

Holywell Plus 5ft Twin Batten - White

Product code **431292**

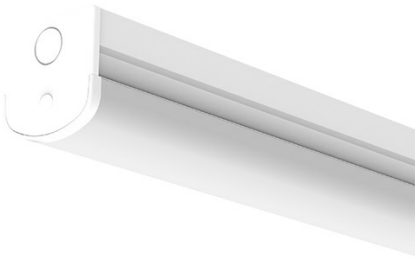

Power	**25W / 50W**
Luminous flux	**4,000 / 8,000 lm**
Efficacy	**160 lm/W**
Colour temperature	**3000K / 4000K / 6000K**
Beam angle	**120°**
Protection	**IP20 · IK06**
Lifetime L70	**54,000 h**
Warranty	**5 years**

Introduction

Set the wattage. Choose the colour. Add a sensor or emergency pack on site. A twin LED batten in 4ft, 5ft and 6ft for corridors, stores and workshops.

Features

- Single & Twin Outputs
- Unique opal diffuser design for optimum performance and light distribution
- Steel body construction with powder coat finish
- Conduit entry points at both ends
- Suitable for central BESA mounting
- Additional screw to secure end cap

Certification and options

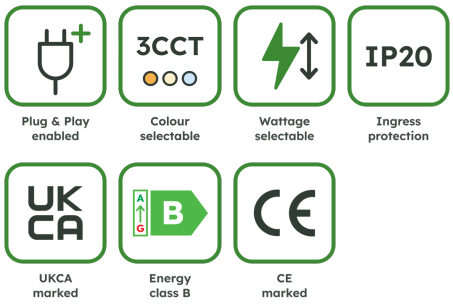

Recommended applications

Plant rooms, stores, corridors, workshops, car parks





Specification

Optical

Luminous flux	**4,000 / 8,000 lm**
Efficacy	**160 lm/W**
Colour temperature	**3000K / 4000K / 6000K**
Colour rendering	**Ra 80**
Beam angle	**120°**
Flicker	**Flicker Free**

Electrical

Power	**25W / 50W**
Supply voltage	**220-240V AC**
Frequency	**50 Hz / 60 Hz**
Driver type	**CC**
Driver	**Lifud**
Dimming	**Fixed**

Lifetime and warranty

Lifetime L70	**54,000 h**
Lifetime L80	**54,000 h**
Lifetime L90	**34,000 h**
Energy class	**B**
Warranty	**5 years**
Replaceable driver	**Professional**
Replaceable light source	**Professional**

Construction

Ingress protection	**IP20**
Impact resistance	**IK06**
Electrical class	**Class I**
Body	**Steel**
Diffuser	**Polycarbonate**
Colour (RAL)	**RAL 9003**
Location	**Internal**
Dimensions (L x W x H)	**1503 x 64 x 66 mm**

Installation

Mounting	**BESA/Conduit**
Connection	**Push Fit Terminal**
Ambient temperature	**0 to +40 °C**

Values are nominal. Luminous flux and efficacy are for the complete luminaire. Specifications may change without notice; the product page always carries the latest version.

Dimensions

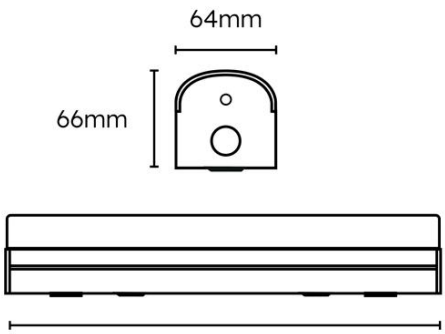

4ft: 1203mm, **5ft:** 1503mm
6ft: 1803mm

Ordering information · Holywell Plus

CODE	DESCRIPTION	POWER	LUMINOUS FLUX	EFFICACY	CCT	BEAM
431291	Holywell Plus 4ft Twin Batten - White	18W / 36W	2,900 / 5,750	160 lm/W	3000K / 4000K / 6000K	120°
431292	**Holywell Plus 5ft Twin Batten - White**	**25W / 50W**	**4,000 / 8,000**	**160 lm/W**	**3000K / 4000K / 6000K**	**120°**
431293	Holywell Plus 6ft Twin Batten - White	28W / 56W	4,500 / 8,975	160 lm/W	3000K / 4000K / 6000K	120°
431292-DA	Holywell Plus 5ft Twin Batten - White DALI	25W / 50W	4,000 / 8,000	160 lm/W	3000K / 4000K / 6000K	120°
431293-DA	Holywell Plus 6ft Twin Batten - White DALI	28W / 56W	4,500 / 8,975	160 lm/W	3000K / 4000K / 6000K	120°
431291-E3	Holywell Plus 4ft Twin Batten - White E-SEL3 Emergency	18W / 36W	2,900 / 5,750	160 lm/W	3000K / 4000K / 6000K	120°
431292-E3	Holywell Plus 5ft Twin Batten - White E-SEL3 Emergency	25W / 50W	4,000 / 8,000	160 lm/W	3000K / 4000K / 6000K	120°
431292-DA-E3	Holywell Plus 5ft Twin Batten - White DALI	25W / 50W	4,000 / 8,000	160 lm/W	3000K / 4000K / 6000K	120°
431293-E3	Holywell Plus 6ft Twin Batten - White E-SEL3 Emergency	28W / 56W	4,500 / 8,975	160 lm/W	3000K / 4000K / 6000K	120°
431293-DA-DA3	Holywell Plus 6ft Twin Batten - White DALI & DALI Emergency	28W / 56W	4,500 / 8,975	160 lm/W	3000K / 4000K / 6000K	120°
431293-DA-E3	Holywell Plus 6ft Twin Batten - White DALI	28W / 56W	4,500 / 8,975	160 lm/W	3000K / 4000K / 6000K	120°
431291-MW	Holywell Plus 4ft Twin Batten - White	18W / 36W	2,900 / 5,750	160 lm/W	3000K / 4000K / 6000K	120°
431292-MW	Holywell Plus 5ft Twin Batten - White	25W / 50W	4,000 / 8,000	160 lm/W	3000K / 4000K / 6000K	120°
431293-MW	Holywell Plus 6ft Twin Batten - White	28W / 56W	4,500 / 8,975	160 lm/W	3000K / 4000K / 6000K	120°
431291-E3-MW	Holywell Plus 4ft Twin Batten - White E-SEL3 Emergency	18W / 36W	2,900 / 5,750	160 lm/W	3000K / 4000K / 6000K	120°
431292-E3-MW	Holywell Plus 5ft Twin Batten - White E-SEL3 Emergency	25W / 50W	4,000 / 8,000	160 lm/W	3000K / 4000K / 6000K	120°
431293-E3-MW	Holywell Plus 6ft Twin Batten - White	28W / 56W	4,500 / 8,975	160 lm/W	3000K / 4000K / 6000K	120°

Code suffixes: -E3 E-SEL3 emergency, 3 hour -MW Microwave sensor -DA DALI dimming

Compatible modules and accessories

	CODE	DESCRIPTION
	430916	Alwen Linear Microwave Sensor 220-240V AC 200W Max Plug & Play
	401752	Alwen ON/OFF PIR External Mount White (Batten)
	430962	Grafham 3.5W Conversion Pack 50-300V DC 0-40mA LifePO4 3.2V DC 3.2Ah Plug & Play E-SEL3 Emergency

DOWNLOADS

Photometric files (LDT), installation instructions and the latest datasheet are on the product page:

www.lumineux.co.uk/shop/431292-holywell-plus-batten-5ft-twin-25w-50w-3cct-white-plug-play-55071

WARRANTY AND SUPPORT

5 years warranty. Terms at www.lumineux.co.uk/product-warranty-on-site-warranty.

Free lighting design and technical support: 01507 328031, support@lumineux.co.uk