FLOODLIGHT

Melbury PIR

Melbury Floodlight - Black PIR

Product code **431370-PIR**

Power	**10W**
Luminous flux	**1,050 lm**
Efficacy	**105 lm/W**
Colour temperature	**4000K**
Beam angle	**100°**
Protection	**IP65 · IK06**
Lifetime L70	**50,000 h**
Warranty	**3 years**



Introduction

4000K, IP65, up to 105 lm/W.

Features

- Diecast aluminium body
- Angled bracket for ease of installation
- Supplied with 1M prewired H05RN-F cable
- Solid state PIR sensor
- Manual override function
- IP65
- 3 Year Product Warranty

Certification and options

IP65 Ingress protection · PIR sensor · UKCA marked · CE marked

Recommended applications

Yards, car parks, loading areas, building facades







Specification

Optical

Luminous flux	**1,050 lm**
Efficacy	**105 lm/W**
Colour temperature	**4000K**
Colour rendering	**Ra 80**
Beam angle	**100°**

Electrical

Power	**10W**
Supply voltage	**220-240V AC**
Frequency	**50 Hz / 60 Hz**
Driver type	**CC**
Driver	**Lumineux**
Dimming	**Fixed**
Standby power	**0.23 W**

Lifetime and warranty

Lifetime L70	**50,000 h**
Energy class	**E**
Warranty	**3 years**
Replaceable driver	**Professional**
Replaceable light source	**Professional**

Construction

Ingress protection	**IP65**
Impact resistance	**IK06**
Electrical class	**Class I**
Body	**Aluminium**
Diffuser	**Glass**
Colour (RAL)	**RAL 7224**
Location	**Internal**
Dimensions (L x W x H)	**150 x 112 x 75 mm**

Installation

Connection	**1m H05RN-F**
Max. mounting height	**3 m**
Ambient temperature	**-20 to +30 °C**

Sensor and controls

Detection radius	**2.5 - 8 m**
Hold time	**1 - 10**
Technology	**PIR**
Switching	**On-Off**
Grouping	**Standalone**

Values are nominal. Luminous flux and efficacy are for the complete luminaire. Specifications may change without notice; the product page always carries the latest version.

Dimensions

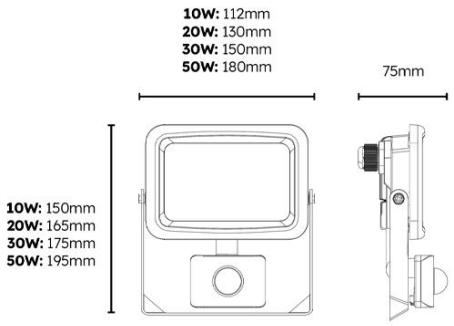

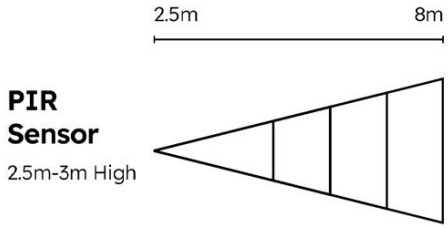

Ordering information · Melbury

CODE	DESCRIPTION	POWER	LUMINOUS FLUX	EFFICACY	CCT	BEAM
431370	Melbury Floodlight - Black	10W	1,050	105 lm/W	4000K	100°
431371	Melbury Floodlight - Black	20W	2,100	105 lm/W	4000K	100°
431372	Melbury Floodlight - Black	30W	3,150	105 lm/W	4000K	100°
431373	Melbury Floodlight - Black	50W	5,250	105 lm/W	4000K	100°
431370-PIR	**Melbury Floodlight - Black PIR**	**10W**	**1,050**	**105 lm/W**	**4000K**	**100°**
431371-PIR	Melbury Floodlight - Black PIR	20W	2,100	105 lm/W	4000K	100°
431372-PIR	Melbury Floodlight - Black PIR	30W	3,150	105 lm/W	4000K	100°
431373-PIR	Melbury Floodlight - Black PIR	50W	5,250	105 lm/W	4000K	100°

Code suffixes: -PIR PIR sensor

DOWNLOADS

Photometric files (LDT), installation instructions and the latest datasheet are on the product page:

www.lumineux.co.uk/shop/431370-pir-melbury-floodlight-10w-4000k-ip65-black-pir-55112

WARRANTY AND SUPPORT

3 years warranty. Terms at www.lumineux.co.uk/product-warranty-on-site-warranty.

Free lighting design and technical support: 01507 328031, support@lumineux.co.uk