ROUND HIGH BAY

Foremark Plus

Foremark Plus High Bay - Black Plug & Play 120D

Product code **430643-120**

Power	**110W**
Luminous flux	**22,550 lm**
Efficacy	**205 lm/W**
Colour temperature	**5000K**
Beam angle	**120°**
Protection	**IP65 · IK08**
Lifetime L70	**60,000 h**
Warranty	**5 years**



A72 · A-rated · 7 year warranty · 2 years on site

Introduction

High-efficiency industrial lighting with Plug & Play controls.

Features

- Supplied with 1.5M prewired H05RN-F cable
- 'A' rated product delivering over 205 lm/W with optic
- 90º or 120º optic options
- Plug & Play Enabled – Sensors and Emergency

Certification and options

Plug & Play enabled · Ingress protection (IP65) · Impact rating (IK08) · UKCA marked · Energy class A · CE marked

Recommended applications

Warehousing, distribution centres, manufacturing, sports halls

Specification

Optical

Luminous flux	**22,550 lm**
Efficacy	**205 lm/W**
Colour temperature	**5000K**
Colour rendering	**Ra 80**
Beam angle	**120°**
Distribution	**Symmetric**

Electrical

Power	**110W**
Supply voltage	**120-240V AC**
Frequency	**50 Hz / 60 Hz**
Driver type	**CC**
Driver	**Sosen**
Dimming	**truSmart**

Lifetime and warranty

Lifetime L70	**60,000 h**
Energy class	**A**
Warranty	**5 years**
Replaceable driver	**Professional**
Replaceable light source	**Professional**

Construction

Ingress protection	**IP65**
Impact resistance	**IK08**
Electrical class	**Class I**
Body	**Aluminium**
Diffuser	**Polycarbonate**
Colour (RAL)	**RAL 9017**
Location	**Internal**
Socket	**Zhaga**
Dimensions (L x W x H)	**250 x 250 x 185 mm**

Installation

Mounting	**BESA/Conduit**
Connection	**1.5m H05RN-F**
Ambient temperature	**-30 to +50 °C**

Values are nominal. Luminous flux and efficacy are for the complete luminaire. Specifications may change without notice; the product page always carries the latest version.

Dimensions

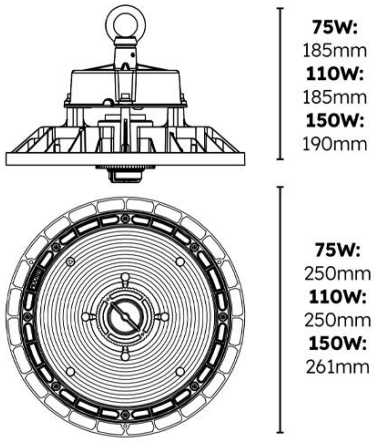

Ordering information · Foremark Plus

CODE	DESCRIPTION	POWER	LUMINOUS FLUX	EFFICACY	CCT	BEAM
430642-120	Foremark Plus High Bay - Black Plug & Play 120D	75W	15,375	205 lm/W	5000K	120°
430642-90	Foremark Plus High Bay - Black Plug & Play 90D	75W	15,375	205 lm/W	5000K	90°
430643-120	**Foremark Plus High Bay - Black Plug & Play 120D**	**110W**	**22,550**	**205 lm/W**	**5000K**	**120°**
430643-90	Foremark Plus High Bay - Black Plug & Play 90D	110W	22,550	205 lm/W	5000K	90°
430644-120	Foremark Plus High Bay - Black Plug & Play 120D	150W	30,750	205 lm/W	5000K	120°
430644-90	Foremark Plus High Bay - Black Plug & Play 90D	150W	30,750	205 lm/W	5000K	90°

DOWNLOADS

Photometric files (LDT), installation instructions and the latest datasheet are on the product page:

www.lumineux.co.uk/shop/430643-120-foremark-plus-high-bay-110w-5000k-ip65-120d-plug-play-zhaga-55321

WARRANTY AND SUPPORT

5 years warranty. Terms at www.lumineux.co.uk/product-warranty-on-site-warranty.

Free lighting design and technical support: 01507 328031, support@lumineux.co.uk