DOWNLIGHT

Avon Pro UGR

Avon Pro Fire Rated Anti Glare Downlight - Black Insert/White Bezel

Product code **430865**



Power	**6W / 8W**
Luminous flux	**550 / 725 lm**
Efficacy	**90 lm/W**
Colour temperature	**2700K / 3000K / 4000K / 6000K**
Beam angle	**60°**
Protection	**54/20 · IK06**
Lifetime L70	**50,000 h**
Warranty	**5 years**

Introduction

Wattage and colour selectable, IP54, up to 95 lm/W.

Features

- Wattage selectable: 6W/8W
- 4CCT selectable: 2700K, 3000K, 4000K, 6000K
- Complies with parts B, C, E and L of Building Regulations
- Suitable for solid or stranded cable Ø 0.75 – 2.5mm
- Fully tested for 30, 60 and 90 minutes fire rated
- Meets STA Pattern Book fire test requirements
- 5 Year Product Warranty

Certification and options



Recommended applications

Offices, corridors, retail, hospitality



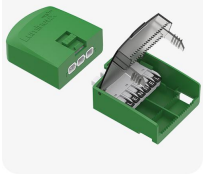

Fire Rated	30 min	60 min	90 min
Solid Joist	•	•	•
Web joist	•	•	
I Joist	•	•	

Specification

Optical

Luminous flux	**550 / 725 lm**
Efficacy	**90 lm/W**
Colour temperature	**2700K / 3000K / 4000K / 6000K**
Colour selection	**4CCT**
Colour rendering	**Ra 80**
Beam angle	**60°**
Flicker	**Flicker Free**

Electrical

Power	**6W / 8W**
Supply voltage	**220-240V AC**
Frequency	**50 Hz / 60 Hz**
Driver type	**CC**
Driver	**Lumineux**
Dimming	**Triac**

Lifetime and warranty

Lifetime L70	**50,000 h**
Energy class	**D**
Warranty	**5 years**
Replaceable driver	**No**
Replaceable light source	**No**

Construction

Ingress protection	**54/20**
Impact resistance	**IK06**
Electrical class	**Class II**
Body	**Aluminium**
Diffuser	**Polycarbonate**
Colour (RAL)	**RAL 9016**
Location	**Internal**
Cut-out (mm)	**68-75**
Dimensions (L x W x H)	**85 x 85 x 68 mm**

Installation

Mounting	**BESA/Conduit**
Connection	**Lever Terminal**
Ambient temperature	**-10 to +45 °C**

Values are nominal. Luminous flux and efficacy are for the complete luminaire. Specifications may change without notice; the product page always carries the latest version.

Dimensions

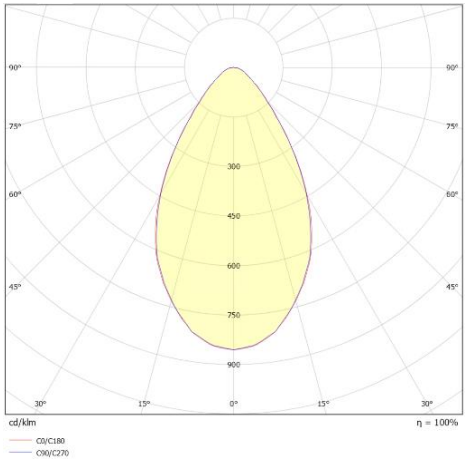

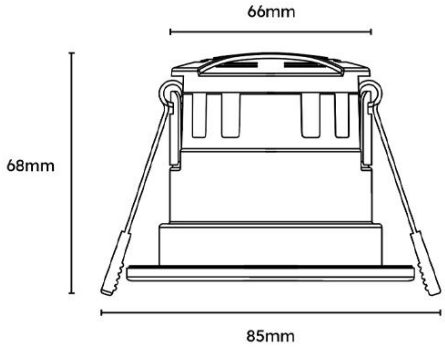

Ordering information · Avon UGR

CODE	DESCRIPTION	POWER	LUMINOUS FLUX	EFFICACY	CCT	BEAM
430865	**Avon Pro Fire Rated Anti Glare Downlight - Black Insert/White Bezel**	**6W / 8W**	**550 / 725**	**90 lm/W**	**2700K / 3000K / 4000K / 6000K**	**60°**
430864	Avon Pro Fire Rated Anti Glare Downlight - White Insert/White Bezel	6W / 8W	575 / 750	95 lm/W	2700K / 3000K / 4000K / 6000K	60°

DOWNLOADS

Photometric files (LDT), installation instructions and the latest datasheet are on the product page:

www.lumineux.co.uk/shop/430865-avon-pro-fire-rated-anti-glare-downlight-6w-8w-4cct-ip65-black-insert-white-bezel-60d-55353

WARRANTY AND SUPPORT

5 years warranty. Terms at www.lumineux.co.uk/product-warranty-on-site-warranty.

Free lighting design and technical support: 01507 328031, support@lumineux.co.uk