EMERGENCY LIGHTING

Woodhead Corridor

Woodhead Emergency Downlight Corridor - White/Black E-SEL3 Emergency

Product code **430959**



Power	**1W**
Luminous flux	**100 lm**
Efficacy	**100 lm/W**
Colour temperature	**6500K**
Beam angle	**155 x 110°**
Protection	**IP20 · IK03**
Warranty	**5 years**

Introduction

6500K, IP20, up to 100 lm/W.

Features

- Black and White Bezel included
- LifePO4 battery
- E-SEL3 Manual / Self-Test selection inside
- Non-Maintained
- Recessed installation

Certification and options

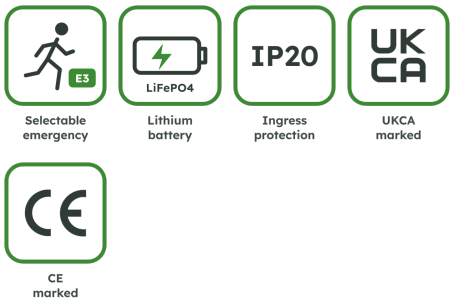

Recommended applications

Escape routes, open areas, stairwells

Specification

Optical

Luminous flux	**100 lm**
Efficacy	**100 lm/W**
Colour temperature	**6500K**
Colour rendering	**Ra 80**
Colour consistency	**6 SDCM**
Beam angle	**155 x 110°**

Electrical

Power	**1W**
Supply voltage	**220-240V AC**
Frequency	**50 Hz / 60 Hz**
Driver type	**CC**
Driver	**Lumineux**
Dimming	**Fixed**

Lifetime and warranty

Warranty	**5 years**
Replaceable driver	**Professional**
Replaceable light source	**Professional**

Construction

Ingress protection	**IP20**
Impact resistance	**IK03**
Electrical class	**Class II**
Body	**Polycarbonate**
Diffuser	**Polycarbonate**
Colour (RAL)	**RAL 9016**
Location	**Internal**
Cut-out (mm)	**50**
Dimensions (L x W x H)	**65 x 65 x 40 mm**

Installation

Mounting	**BESA/Conduit**
Connection	**Flying Lead**
Ambient temperature	**0 to +30 °C**

Emergency

Battery height (mm)	**18**
Battery length (mm)	**65**
Battery (V / Ah)	**3.2 / 1.6**
Battery temperature, max. (°C)	**30**
Battery width (mm)	**18**
Battery capacity	**1,600 mAh**
Cell type	**YH IFR18650 - LiFePO4**
Charge current	**100 mA**
Duration	**3 h**
Emergency IP rating	**IP20**
Emergency output	**100 lm**
Emergency output, standalone	**100 lm**
Mode	**Non-Maintained**
Emergency power	**1.0 W**
Module height (mm)	**26**
Module length (mm)	**190**
Module width (mm)	**28**
Recharge time	**24 h**

Values are nominal. Luminous flux and efficacy are for the complete luminaire. Specifications may change without notice; the product page always carries the latest version.

Dimensions

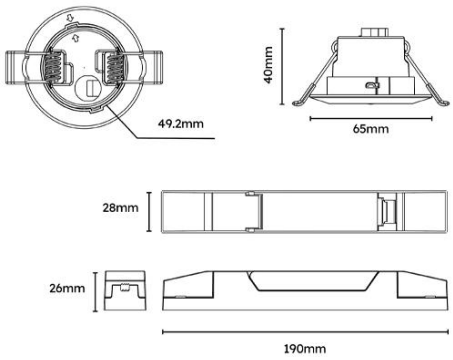

Ordering information · Woodhead

CODE	DESCRIPTION	POWER	LUMINOUS FLUX	EFFICACY	CCT	BEAM
430959	**Woodhead Emergency Downlight Corridor - White/Black E-SEL3 Emergency**	**1W**	**100**	**100 lm/W**	**6500K**	**155 x 110°**
430958	Woodhead Emergency Downlight Open Area - White/Black E-SEL3 Emergency	1W	100	100 lm/W	6500K	130°

DOWNLOADS

Photometric files (LDT), installation instructions and the latest datasheet are on the product page:

www.lumineux.co.uk/shop/430959-woodhead-emergency-downlight-corridor-1w-6500k-white-black-e-sel3-emergency-55478

WARRANTY AND SUPPORT

5 years warranty. Terms at www.lumineux.co.uk/product-warranty-on-site-warranty.

Free lighting design and technical support: 01507 328031, support@lumineux.co.uk