DOWNLIGHT

Meldon

Meldon Adjustable Downlight - 330mm White

Product code **430773**

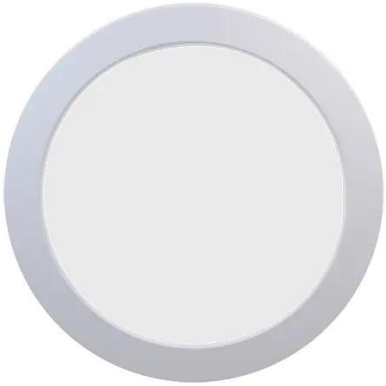

Power	**15W / 22W / 28W**
Luminous flux	**1.425 / 2,100 / 2,650 lm**
Efficacy	**95 lm/W**
Colour temperature	**3000K / 4000K / 6000K**
Beam angle	**110°**
Protection	**IP20 · IK04**
Lifetime L70	**30,000 h**
Warranty	**3 years**

Introduction

Wattage and colour selectable, IP20, up to 95 lm/W.

Features

- Adjustable Downlight
- 3CCT Selectable options: 4000K, 5000K, 6000K
- Wattage Selectable options: 10W/15W/18W, 15W/22W/28W
- Surface mount or recessed
- Multi-purpose, slim downlight
- PIR options
- IP20 Ingress Protection
- 5 Year Product Warranty

Certification and options

IP20 Ingress protection

UKCA marked

CE marked

Recommended applications

Offices, corridors, retail, hospitality

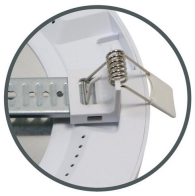





Specification

Optical

Luminous flux	**1.425 / 2,100 / 2,650 lm**
Efficacy	**95 lm/W**
Colour temperature	**3000K / 4000K / 6000K**
Colour selection	**3CCT**
Colour rendering	**Ra 80**
Beam angle	**110°**
Flicker	**Flicker Free**

Electrical

Power	**15W / 22W / 28W**
Supply voltage	**220-240V AC**
Frequency	**50 Hz / 60 Hz**
Driver	**DOB**
Dimming	**Fixed**

Lifetime and warranty

Lifetime L70	**30,000 h**
Energy class	**F**
Warranty	**3 years**
Replaceable driver	**Professional**
Replaceable light source	**Professional**

Construction

Ingress protection	**IP20**
Impact resistance	**IK04**
Electrical class	**Class II**
Body	**Polycarbonate**
Diffuser	**PMMA**
Diffuser fire rating	**TP(b)**
Colour (RAL)	**RAL 9003**
Location	**Internal**
Cut-out (mm)	**65-310**
Dimensions (L x W x H)	**330 x 330 x 25 mm**
Weight	**0.775 kg**

Installation

Mounting	**BESA/Conduit**
Connection	**Flying Lead**
Ambient temperature	**0 to +40 °C**

Values are nominal. Luminous flux and efficacy are for the complete luminaire. Specifications may change without notice; the product page always carries the latest version.

Dimensions

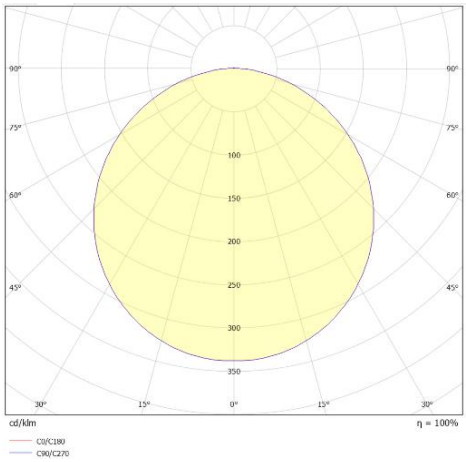

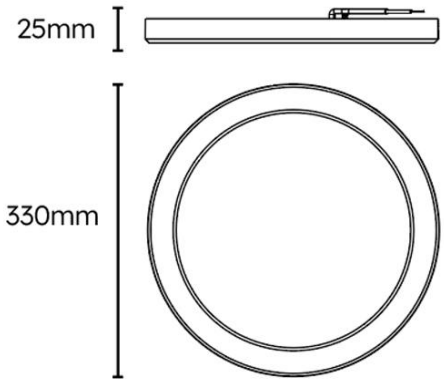

Ordering information · Meldon

CODE	DESCRIPTION	POWER	LUMINOUS FLUX	EFFICACY	CCT	BEAM
430747	Meldon Adjustable Downlight - 220mm White	10W / 15W / 18W	950 / 1,425 / 1,700	95 lm/W	4000K	110°
430748	Meldon Adjustable Downlight - 220mm White PIR	10W / 15W / 18W	950 / 1,425 / 1,700	95 lm/W	4000K	110°
430774	Meldon Adjustable Downlight - 330mm White PIR	15W / 22W / 28W	1.425 / 2,100 / 2,650	95 lm/W	3000K / 4000K / 6000K	110°
430773	**Meldon Adjustable Downlight - 330mm White**	**15W / 22W / 28W**	**1.425 / 2,100 / 2,650**	**95 lm/W**	**3000K / 4000K / 6000K**	**110°**
430745	Meldon Adjustable Downlight - 220mm White	18W	1,700	95 lm/W	3000K / 4000K / 6000K	110°
430749	Meldon Adjustable Downlight - 220mm White Dimmable	18W	1,425	95 lm/W	3000K / 4000K / 6000K	110°
430746	Meldon Adjustable Downlight - 220mm White PIR	18W	1,700	95 lm/W	3000K / 4000K / 6000K	110°

Compatible modules and accessories

	CODE	DESCRIPTION
	430750	Meldon 220mm Black Bezel

DOWNLOADS

Photometric files (LDT), installation instructions and the latest datasheet are on the product page:

www.lumineux.co.uk/shop/430773-meldon-adjustable-downlight-330mm-15w-22w-28w-3cct-white-55582

WARRANTY AND SUPPORT

3 years warranty. Terms at www.lumineux.co.uk/product-warranty-on-site-warranty.

Free lighting design and technical support: 01507 328031, support@lumineux.co.uk