LED BATTEN

Sutton Plus

Sutton Plus 6ft Twin Batten - White High Output Emergency

Product code **430398-H3**



Power	**60W**
Luminous flux	**7,800 lm**
Efficacy	**130 lm/W**
Colour temperature	**4000K / 6000K**
Beam angle	**120°**
Protection	**IP20 · IK06**
Lifetime L70	**50,000 h**
Warranty	**5 years**

Introduction

Colour selectable, IP20, up to 130 lm/W.

Features

- Frosted, ribbed polycarbonate diffuser to reduce glare
- Improved thermals utilising aluminium back PCBs
- Push-fit terminals
- 20mm conduit entry
- Additional screw to secure end cap
- H3 - High Output Emergency 440lm option available

Certification and options

2CCT — Colour selectable
IP20 — Ingress protection
UKCA — UKCA marked
CE — CE marked

Recommended applications

Plant rooms, stores, corridors, workshops, car parks



Specification

Optical

Luminous flux	**7,800 lm**
Efficacy	**130 lm/W**
Colour temperature	**4000K / 6000K**
Colour selection	**2CCT**
Colour rendering	**Ra 80**
Beam angle	**120°**
Flicker	**Flicker Free**

Electrical

Power	**60W**
Supply voltage	**220-240V AC**
Frequency	**50 Hz / 60 Hz**
Driver type	**CC**
Driver	**Lifud**
Dimming	**Fixed**

Lifetime and warranty

Lifetime L70	**50,000 h**
Energy class	**C**
Warranty	**5 years**
Replaceable driver	**Professional**
Replaceable light source	**Professional**

Construction

Ingress protection	**IP20**
Impact resistance	**IK06**
Electrical class	**Class I**
Body	**Steel**
Diffuser	**Polycarbonate**
Colour (RAL)	**RAL 9003**
Location	**Internal**
Dimensions (L x W x H)	**1829 x 64 x 62 mm**

Installation

Mounting	**BESA/Conduit**
Connection	**Push Fit Terminal**
Ambient temperature	**0 to +30 °C**

Values are nominal. Luminous flux and efficacy are for the complete luminaire. Specifications may change without notice; the product page always carries the latest version.

Dimensions

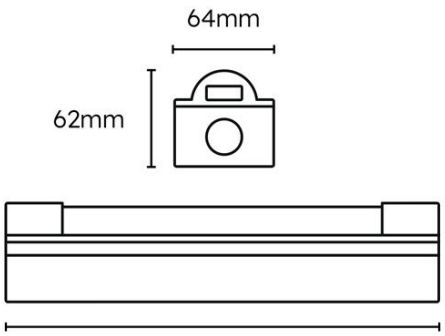

4ft: 1220mm, **5ft:** 1524mm
6ft: 1829mm

Ordering information · Sutton Plus

CODE	DESCRIPTION	POWER	LUMINOUS FLUX	EFFICACY	CCT	BEAM
430402	Sutton Plus 4ft Single Batten - White	19W	2,475	130 lm/W	4000K / 6000K	120°
430395	Sutton Plus 5ft Single Batten - White	27W	3,500	130 lm/W	4000K / 6000K	120°
430403	Sutton Plus 4ft Twin Batten - White	38W	4,950	130 lm/W	4000K / 6000K	120°
430397	Sutton Plus 6ft Single Batten - White	38W	4,950	130 lm/W	4000K / 6000K	120°
430396	Sutton Plus 5ft Twin Batten - White	50W	6,500	130 lm/W	4000K / 6000K	120°
430398	Sutton Plus 6ft Twin Batten - White	60W	7,800	130 lm/W	4000K / 6000K	120°
430402-H3	Sutton Plus 4ft Single Batten - White High Output Emergency	19W	2,475	130 lm/W	4000K / 6000K	120°
430395-H3	Sutton Plus 5ft Single Batten - White High Output Emergency	27W	3,500	130 lm/W	4000K / 6000K	120°
430403-H3	Sutton Plus 4ft Twin Batten - White High Output Emergency	38W	4,950	130 lm/W	4000K / 6000K	120°
430397-H3	Sutton Plus 6ft Single Batten - White High Output Emergency	38W	4,950	130 lm/W	4000K / 6000K	120°
430396-H3	Sutton Plus 5ft Twin Batten - White High Output Emergency	50W	6,500	130 lm/W	4000K / 6000K	120°
430398-H3	**Sutton Plus 6ft Twin Batten - White High Output Emergency**	**60W**	**7,800**	**130 lm/W**	**4000K / 6000K**	**120°**
430402-PIR	Sutton Plus 4ft Single Batten - White PIR	19W	2,475	130 lm/W	4000K / 6000K	120°
430395-PIR	Sutton Plus 5ft Single Batten - White PIR	20W	3,500	130 lm/W	4000K / 6000K	120°
430403-PIR	Sutton Plus 4ft Twin Batten - White PIR	38W	4,950	130 lm/W	4000K / 6000K	120°
430397-PIR	Sutton Plus 6ft Single Batten - White PIR	38W	4,950	130 lm/W	4000K / 6000K	120°
430396-PIR	Sutton Plus 5ft Twin Batten - White PIR	50W	6,500	130 lm/W	4000K / 6000K	120°
430398-PIR	Sutton Plus 6ft Twin Batten - White PIR	60W	7,800	130 lm/W	4000K / 6000K	120°
430402-H3-PIR	Sutton Plus 4ft Single Batten - White High Output Emergency & PIR	19W	2,475	130 lm/W	4000K / 6000K	120°
430395-H3-PIR	Sutton Plus 5ft Single Batten - White High Output Emergency & PIR	27W	3,500	130 lm/W	4000K / 6000K	120°
430403-H3-PIR	Sutton Plus 4ft Twin Batten - White High Output Emergency & PIR	38W	4,950	130 lm/W	4000K / 6000K	120°
430397-H3-PIR	Sutton Plus 6ft Single Batten - White High Output Emergency & PIR	38W	4,950	130 lm/W	4000K / 6000K	120°
430396-H3-PIR	Sutton Plus 5ft Twin Batten - White High Output Emergency & PIR	50W	6,500	130 lm/W	4000K / 6000K	120°
430398-H3-PIR	Sutton Plus 6ft Twin Batten - White High Output Emergency & PIR	60W	7,800	130 lm/W	4000K / 6000K	120°

Code suffixes: -PIR PIR sensor

DOWNLOADS

Photometric files (LDT), installation instructions and the latest datasheet are on the product page:

www.lumineux.co.uk/shop/430398-h3-sutton-plus-batten-6ft-twin-60w-2cct-4k-6k-white-ho-emergency-55622

WARRANTY AND SUPPORT

5 years warranty. Terms at www.lumineux.co.uk/product-warranty-on-site-warranty.

Free lighting design and technical support: 01507 328031, support@lumineux.co.uk