LINEAR HIGH BAY

Belmont

Belmont Linear High Bay - Grey 25x80D

Product code **430242-80**

Power	**180W**
Luminous flux	**27,925 lm**
Efficacy	**155 lm/W**
Colour temperature	**5000K**
Beam angle	**25x80°**
Protection	**IP66 · IK10**
Lifetime L70	**50,000 h**
Warranty	**5 years**



A72 · A-rated · 7 year warranty · 2 years on site

Introduction

A linear high bay with a tough, impact-resistant housing and Fresnel optics for glare control. Selectable-wattage models for anything from school sports halls to industrial warehouses.

Features

- Fresnel optics for improved glare control
- Tough, impact resistant IK10 housing
- Plug & Play Enabled – Sensors and Emergency

Certification and options

Plug & Play enabled · Wattage selectable · IP66 Ingress protection · IK10 Impact rating · UKCA marked · CE marked

Recommended applications

Warehouse aisles, manufacturing, sports halls

Specification

Optical

Luminous flux	**27,925 lm**
Efficacy	**155 lm/W**
Colour temperature	**5000K**
Colour rendering	**Ra 80**
Beam angle	**25x80°**
Distribution	**Asymmetric**

Electrical

Power	**180W**
Supply voltage	**220-240V AC**
Frequency	**50 Hz / 60 Hz**
Driver type	**CC**
Driver	**Sosen**
Dimming	**0-10V**

Lifetime and warranty

Lifetime L70	**50,000 h**
Warranty	**5 years**
Replaceable driver	**Professional**
Replaceable light source	**Professional**

Construction

Ingress protection	**IP66**
Impact resistance	**IK10**
Electrical class	**Class I**
Body	**Aluminium**
Diffuser	**Polycarbonate**
Colour (RAL)	**RAL 9006**
Location	**Internal**
Socket	**Zhaga**
Dimensions (L x W x H)	**680 x 325 x 60 mm**

Installation

Mounting	**BESA/Conduit**
Connection	**1.5m H05RN-F**
Ambient temperature	**-30 to +50 °C**

Values are nominal. Luminous flux and efficacy are for the complete luminaire. Specifications may change without notice; the product page always carries the latest version.

Dimensions

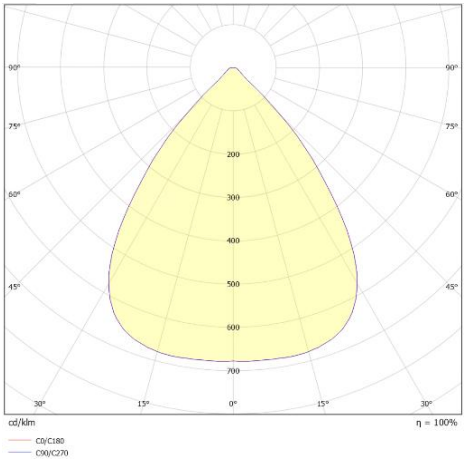

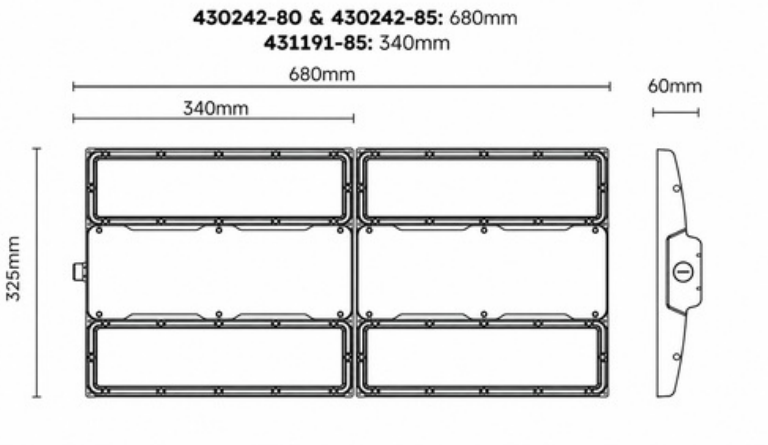

Ordering information · Belmont

CODE	DESCRIPTION	POWER	LUMINOUS FLUX	EFFICACY	CCT	BEAM
431191-85	Belmont Linear High Bay - Grey 85D	100W / 120W / 150W	18,000 / 21,600 / 27,000	180 lm/W	5000K	85°
430242-80	**Belmont Linear High Bay - Grey 25x80D**	**180W**	**27,925**	**155 lm/W**	**5000K**	**25x80°**
430242-85	Belmont Linear High Bay - Grey 85D	180W	28,000	155 lm/W	5000K	85°
431191-85-DA	Belmont Linear High Bay - Grey 85D	100W / 120W / 150W	18,000 / 21,600 / 27,000	180 lm/W	5000K	85°

Code suffixes: -DA DALI dimming

Compatible modules and accessories

	CODE	DESCRIPTION
	401754	Alwen PIR Highbay Remote
	430569	Alwen Plug & Play 12V Microwave Sensor 12M Black (Zhaga)
	430568	Alwen Plug & Play 12V PIR Sensor 12M Black (Zhaga)
	430243	Belmont +/- 60D Rotatable Bracket (Pair)
	430964	Grafham 4W E-SEL3 Linear High Bay Emergency Conversion Pack 20-55V DC 100mA LifePO4 6.4V DC 3.3Ah Plug & Play
	430625	truSmart Crown Zhaga Plug & Play 12V PIR Sensor Black

DOWNLOADS

Photometric files (LDT), installation instructions and the latest datasheet are on the product page:

www.lumineux.co.uk/shop/430242-80-belmont-linear-high-bay-180w-5000k-ip66-grey-25x80d-55681

WARRANTY AND SUPPORT

5 years warranty. Terms at www.lumineux.co.uk/product-warranty-on-site-warranty.

Free lighting design and technical support: 01507 328031, support@lumineux.co.uk