LED PANEL

Wraysbury

Wraysbury Backlit Panel - 600x600 White

Product code **430236**



Power	**32W**
Luminous flux	**3,525 lm**
Efficacy	**110 lm/W**
Colour temperature	**4000K**
Beam angle	**90°**
Protection	**IP65 · IK03**
Lifetime L70	**50,000 h**
Warranty	**5 years**

Introduction

4000K, IP65, up to 110 lm/W.

Features

- IP65 panel including IP65 driver
- Better uniformity and heat dissipation
- Microprismatic TP (a) diffuser
- <19 UGR
- 5 Year Product Warranty

Certification and options

IP65 — Ingress protection

<19 UGR — Low glare UGR<19

UKCA — UKCA marked

CE — CE marked

Recommended applications

Offices, classrooms, healthcare, retail

Specification

Optical

Luminous flux	**3,525 lm**
Efficacy	**110 lm/W**
Colour temperature	**4000K**
Colour rendering	**Ra 80**
Beam angle	**90°**
Glare (UGR)	**<19**
Flicker	**Flicker Free**

Electrical

Power	**32W**
Supply voltage	**220-240V AC**
Frequency	**50 Hz / 60 Hz**
Driver type	**CC**
Driver	**Boke**
Dimming	**Fixed**

Lifetime and warranty

Lifetime L70	**50,000 h**
Energy class	**C**
Warranty	**5 years**
Replaceable driver	**User**
Replaceable light source	**Professional**

Construction

Ingress protection	**IP65**
Impact resistance	**IK03**
Electrical class	**Class II**
Body	**Steel**
Diffuser	**Polycarbonate**
Diffuser fire rating	**TP(a)**
Colour (RAL)	**RAL 9003**
Location	**Internal**
Cut-out (mm)	**1180 x 590**
Dimensions (L x W x H)	**595 x 340 x 595 mm**

Installation

Mounting	**BESA/Conduit**
Connection	**Flying Lead**
Ambient temperature	**0 to +40 °C**

Values are nominal. Luminous flux and efficacy are for the complete luminaire. Specifications may change without notice; the product page always carries the latest version.

Dimensions

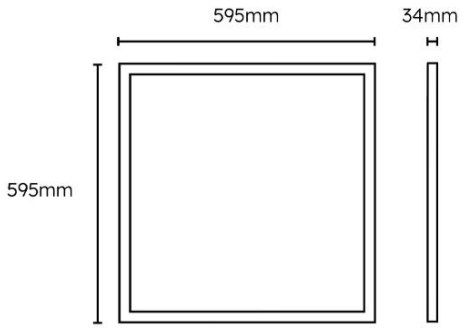

DOWNLOADS

Photometric files (LDT), installation instructions and the latest datasheet are on the product page:

www.lumineux.co.uk/shop/430236-wraysbury-backlit-panel-600x600-32w-4000k-ip65-white-ugr-tp-a-55776

WARRANTY AND SUPPORT

5 years warranty. Terms at www.lumineux.co.uk/product-warranty-on-site-warranty.

Free lighting design and technical support: 01507 328031, support@lumineux.co.uk