LED PANEL

Wraysbury

Wraysbury Indirect Panel - 600x600 White

Product code **430060**

Power	**30W**
Luminous flux	**3,450 lm**
Efficacy	**115 lm/W**
Colour temperature	**4000K**
Beam angle	**90°**
Protection	**IP40 · IK03**
Lifetime L70	**50,000 h**
Warranty	**5 years**



Introduction

4000K, IP40, up to 115 lm/W.

Features

- 600 x 600 Backlit Panel
- Optic lens for even light distribution
- Flicker free driver
- Loch3 Quick Connector supplied
- Microprismatic TP (a)
- 5 Year Product Warranty

Certification and options

IP40 — Ingress protection

<19 UGR — Low glare UGR<19

UKCA — UKCA marked

CE — CE marked

Recommended applications

Offices, classrooms, healthcare, retail



Specification

Optical

Luminous flux	**3,450 lm**
Efficacy	**115 lm/W**
Colour temperature	**4000K**
Colour rendering	**Ra 80**
Beam angle	**90°**
Glare (UGR)	**<19**
Flicker	**Flicker Free**

Electrical

Power	**30W**
Supply voltage	**220-240V AC**
Frequency	**50 Hz / 60 Hz**
Driver type	**CC**
Driver	**AGT**
Dimming	**Fixed**

Lifetime and warranty

Lifetime L70	**50,000 h**
Energy class	**C**
Warranty	**5 years**
Replaceable driver	**User**
Replaceable light source	**Professional**

Construction

Ingress protection	**IP40**
Impact resistance	**IK03**
Electrical class	**Class II**
Body	**Steel**
Diffuser	**Polystyrene**
Diffuser fire rating	**TP(a)**
Colour (RAL)	**RAL 9003**
Location	**Internal**
Cut-out (mm)	**590 x 590**
Dimensions (L x W x H)	**595 x 595 x 43 mm**
Weight	**2.4 kg**

Installation

Mounting	**BESA/Conduit**
Connection	**Loch3 Quick Connector**
Ambient temperature	**0 to +40 °C**

Values are nominal. Luminous flux and efficacy are for the complete luminaire. Specifications may change without notice; the product page always carries the latest version.

Dimensions

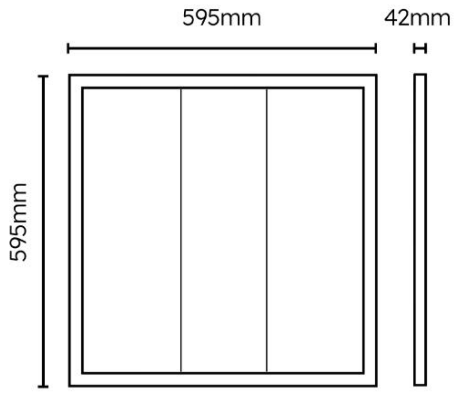

Compatible modules and accessories

	CODE	DESCRIPTION
	430971	Grafham 2W E-SEL3 Emergency Conversion Pack 20-55V DC 130mA LiFePO4 3.2V DC 3.2 mAh Loch4 Connector
	430269	LED Multi Dimmable Driver 24W-42W (Push Dim, 1-10V & DALI2) DC30-40V 600-1050mA 200-240V Flicker Free
	430266	LED Triac Dimmable Driver 18W-32W DC30-40V 200-240V Flicker Free

DOWNLOADS

Photometric files (LDT), installation instructions and the latest datasheet are on the product page:

www.lumineux.co.uk/shop/430060-wraysbury-indirect-panel-600x600-30w-4000k-white-ugr-tp-a-55926

WARRANTY AND SUPPORT

5 years warranty. Terms at www.lumineux.co.uk/product-warranty-on-site-warranty.

Free lighting design and technical support: 01507 328031, support@lumineux.co.uk