SPORTS FLOODLIGHT

Carsington Plus

Carsington Plus Sports Floodlight - 25x130D

Product code **430510-25-415V**

Power	**600W**
Luminous flux	**81,000 lm**
Efficacy	**135 lm/W**
Colour temperature	**5000K**
Beam angle	**25°**
Protection	**IP66 · IK09**
Lifetime L70	**100,000 h**
Warranty	**5 years**



Introduction

5000K, IP66, up to 135 lm/W.

Features

- Ultra-high system efficiency
- High quality Lumileds LED chip and Inventronics driver
- Control gear has IP68 Plug & Play connectors
- Professionally designed true asymmetric flat optics
- High quality Akzo Nobel anti-corrosion powder coating
- DALI Driver

Certification and options

IP66 Ingress protection · IK09 Impact rating · UKCA marked · CE marked

Recommended applications

Pitches, courts, sports halls

Specification

Optical

Luminous flux	**81,000 lm**
Efficacy	**135 lm/W**
Colour temperature	**5000K**
Colour rendering	**Ra 70**
Beam angle	**25°**
Distribution	**Asymmetric**

Electrical

Power	**600W**
Supply voltage	**220-415V AC**
Frequency	**50 Hz / 60 Hz**
Driver type	**CC**
Driver	**MOSO**
Dimming	**DALI2**

Lifetime and warranty

Lifetime L70	**100,000 h**
Warranty	**5 years**
Replaceable driver	**No**
Replaceable light source	**Professional**

Construction

Ingress protection	**IP66**
Impact resistance	**IK09**
Electrical class	**Class I**
Body	**Aluminium**
Diffuser	**Polycarbonate**
Finish	**Akzo Nobel Powder Coating**
Colour (RAL)	**RAL 9005**
Location	**External**
Dimensions (L x W x H)	**469 x 689 x 224 mm**
Weight	**17.76 kg**

Installation

Mounting	**BESA/Conduit**
Connection	**1.5m H05RN-F**
Ambient temperature	**-30 to +50 °C**

Values are nominal. Luminous flux and efficacy are for the complete luminaire. Specifications may change without notice; the product page always carries the latest version.

Dimensions

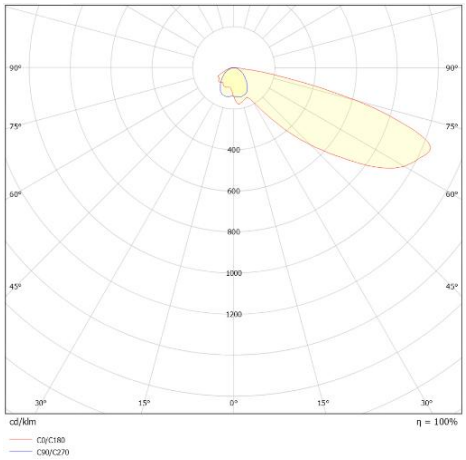

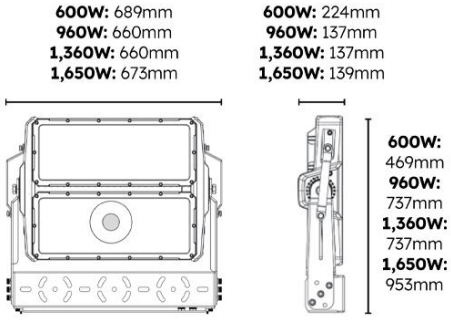

Ordering information · Carsington Plus

CODE	DESCRIPTION	POWER	LUMINOUS FLUX	EFFICACY	CCT	BEAM
430510-25-415V	**Carsington Plus Sports Floodlight - 25x130D**	**600W**	**81,000**	**135 lm/W**	**5000K**	**25°**
431401-25-415V	Carsington Plus Sports Floodlight - Black 25x130D	960W	129,600	135 lm/W	5000K	25°
431402-25-415V	Carsington Plus Sports Flooodlight - Black 25x130D	1360W	183,600	135 lm/W	5000K	25°
431403-25-415V	Carsington Plus Sports Flooodlight - Black 25x130D	1650W	222,750	135 lm/W	5000K	25°

DOWNLOADS

Photometric files (LDT), installation instructions and the latest datasheet are on the product page:

www.lumineux.co.uk/shop/430510-25-415v-carsington-plus-sports-floodlight-600w-5000k-55967

WARRANTY AND SUPPORT

5 years warranty. Terms at www.lumineux.co.uk/product-warranty-on-site-warranty.

Free lighting design and technical support: 01507 328031, support@lumineux.co.uk