LED BATTEN

Olton

Olton UGR 5ft Batten - White High Output Emergency

Product code **430818-H3**



Power	**30W / 58W**
Luminous flux	**3,600 / 6,950 lm**
Efficacy	**120 lm/W**
Colour temperature	**4000K**
Beam angle	**115°**
Protection	**IP20 · IK03**
Lifetime L70	**50,000 h**
Warranty	**5 years**

Introduction

Wattage selectable, IP65, up to 120 lm/W.

Features

- UGR Opal, ribbed polycarbonate diffuser to reduce glare
- Switchable dual wattage batten
- Multi 20mm conduit entry
- 5 Year Product Warranty
- High output self-test emergency available
- Robust steel body construction

Certification and options

Wattage selectable · Ingress protection · UKCA marked · CE marked

Recommended applications

Plant rooms, stores, corridors, workshops, car parks

Specification

Optical

Luminous flux	**3,600 / 6,950 lm**
Efficacy	**120 lm/W**
Colour temperature	**4000K**
Colour rendering	**Ra 80**
Beam angle	**115°**
Glare (UGR)	**<21**
Flicker	**Flicker Free**

Electrical

Power	**30W / 58W**
Supply voltage	**220-240V AC**
Frequency	**50 Hz / 60 Hz**
Driver type	**CC**
Driver	**Lumineux**
Dimming	**Fixed**

Lifetime and warranty

Lifetime L70	**50,000 h**
Energy class	**C**
Warranty	**5 years**
Replaceable driver	**Professional**
Replaceable light source	**Professional**

Construction

Ingress protection	**IP20**
Impact resistance	**IK03**
Electrical class	**Class I**
Body	**Steel**
Diffuser	**Polycarbonate**
Colour (RAL)	**RAL 9003**
Location	**Internal**
Dimensions (L x W x H)	**1490 x 203 x 83 mm**

Installation

Mounting	**BESA/Conduit**
Connection	**Push Fit Terminal**
Ambient temperature	**0 to +30 °C**

Values are nominal. Luminous flux and efficacy are for the complete luminaire. Specifications may change without notice; the product page always carries the latest version.

Dimensions

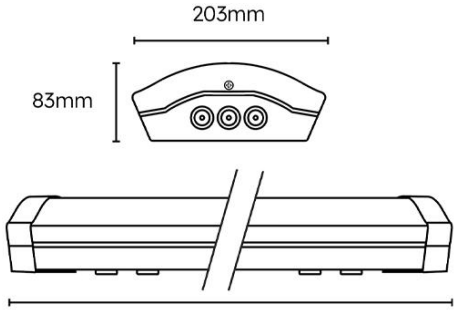

4ft: 1190mm, **5ft:** 1490mm

Ordering information · Olton

CODE	DESCRIPTION	POWER	LUMINOUS FLUX	EFFICACY	CCT	BEAM
430817	Olton UGR 4ft Batten - White	20W / 38W	2,400 / 4,550	120 lm/W	4000K	115°
430817-E3	Olton UGR 4ft Batten - White E-SEL3 Emergency	20W / 38W	2,400 / 4,550	120 lm/W	4000K	115°
430817-H3	Olton UGR 4ft Batten - White High Output Emergency	20W / 38W	2,400 / 4,550	120 lm/W	4000K	115°
430818-H3	**Olton UGR 5ft Batten - White High Output Emergency**	**30W / 58W**	**3,600 / 6,950**	**120 lm/W**	**4000K**	**115°**
430817-MW	Olton UGR 4ft Batten - White Microwave	20W / 38W	2,400 / 4,550	120 lm/W	4000K	115°
430817-E3-MW	Olton UGR 4ft Batten - White E-SEL3 Emergency & Microwave	20W / 28W	2,400 / 4,550	120 lm/W	4000K	115°
430817-H3-MW	Olton UGR 4ft Batten - White High Output Emergency & Microwave	20W / 38W	2,400 / 4,550	120 lm/W	4000K	115°
430818-E3-MW	Olton UGR 5ft Batten - White	30W / 58W	3,600 / 6,950	120 lm/W	4000K	115°
430818-H3-MW	Olton UGR 5ft Batten - White High Output Emergency & Microwave	30W / 58W	3,600 / 6,950	120 lm/W	4000K	115°

Code suffixes: -E3 E-SEL3 emergency, 3 hour -MW Microwave sensor

DOWNLOADS

Photometric files (LDT), installation instructions and the latest datasheet are on the product page:

www.lumineux.co.uk/shop/430818-h3-olton-ugr-academic-batten-5ft-30w-58w-4000k-white-ho-emergency-56016

WARRANTY AND SUPPORT

5 years warranty. Terms at www.lumineux.co.uk/product-warranty-on-site-warranty.

Free lighting design and technical support: 01507 328031, support@lumineux.co.uk