LED BATTEN

# Sutton Plus

Sutton Plus 5ft Twin Batten - White High Output Emergency & PIR

Product code **430396-H3-PIR**

| | |
|---|---|
| Power | **50W** |
| Luminous flux | **6,500 lm** |
| Efficacy | **130 lm/W** |
| Colour temperature | **4000K / 6000K** |
| Beam angle | **120°** |
| Protection | **IP20 · IK06** |
| Lifetime L70 | **50,000 h** |
| Warranty | **5 years** |



## Introduction

Colour selectable, IP20, up to 130 lm/W.

## Features

- Frosted, ribbed polycarbonate diffuser to reduce glare
- Improved thermals utilising aluminium back PCBs
- Push-fit terminals
- 20mm conduit entry
- Additional screw to secure end cap
- H3 - High Output Emergency 440lm option available

## Certification and options

2CCT — Colour selectable
IP20 — Ingress protection
UKCA — UKCA marked
CE — CE marked

## Recommended applications

Plant rooms, stores, corridors, workshops, car parks



# Specification

## Optical

| | |
|---|---|
| Luminous flux | **6,500 lm** |
| Efficacy | **130 lm/W** |
| Colour temperature | **4000K / 6000K** |
| Colour selection | **2CCT** |
| Colour rendering | **Ra 80** |
| Beam angle | **120°** |
| Flicker | **Flicker Free** |

## Electrical

| | |
|---|---|
| Power | **50W** |
| Supply voltage | **220-240V AC** |
| Frequency | **50 Hz / 60 Hz** |
| Driver type | **CC** |
| Driver | **Lifud** |
| Dimming | **Fixed** |
| Standby power | **1.0 W** |

## Lifetime and warranty

| | |
|---|---|
| Lifetime L70 | **50,000 h** |
| Energy class | **C** |
| Warranty | **5 years** |
| Replaceable driver | **Professional** |
| Replaceable light source | **Professional** |

## Construction

| | |
|---|---|
| Ingress protection | **IP20** |
| Impact resistance | **IK06** |
| Electrical class | **Class I** |
| Body | **Steel** |
| Diffuser | **Polycarbonate** |
| Colour (RAL) | **RAL 9003** |
| Location | **Internal** |
| Dimensions (L x W x H) | **1524 x 64 x 64 mm** |

## Installation

| | |
|---|---|
| Mounting | **BESA/Conduit** |
| Connection | **Push Fit Terminal** |
| Max. mounting height | **4 m** |
| Ambient temperature | **0 to +30 °C** |

Values are nominal. Luminous flux and efficacy are for the complete luminaire. Specifications may change without notice; the product page always carries the latest version.

## Dimensions

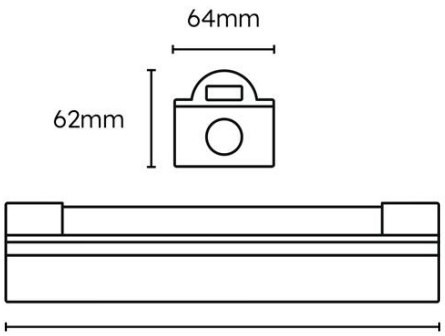


**4ft:** 1220mm, **5ft:** 1524mm
**6ft:** 1829mm

## Ordering information · Sutton Plus

| CODE | DESCRIPTION | POWER | LUMINOUS FLUX | EFFICACY | CCT | BEAM |
|---|---|---|---|---|---|---|
| 430402 | Sutton Plus 4ft Single Batten - White | 19W | 2,475 | 130 lm/W | 4000K / 6000K | 120° |
| 430395 | Sutton Plus 5ft Single Batten - White | 27W | 3,500 | 130 lm/W | 4000K / 6000K | 120° |
| 430403 | Sutton Plus 4ft Twin Batten - White | 38W | 4,950 | 130 lm/W | 4000K / 6000K | 120° |
| 430397 | Sutton Plus 6ft Single Batten - White | 38W | 4,950 | 130 lm/W | 4000K / 6000K | 120° |
| 430396 | Sutton Plus 5ft Twin Batten - White | 50W | 6,500 | 130 lm/W | 4000K / 6000K | 120° |
| 430398 | Sutton Plus 6ft Twin Batten - White | 60W | 7,800 | 130 lm/W | 4000K / 6000K | 120° |
| 430402-H3 | Sutton Plus 4ft Single Batten - White High Output Emergency | 19W | 2,475 | 130 lm/W | 4000K / 6000K | 120° |
| 430395-H3 | Sutton Plus 5ft Single Batten - White High Output Emergency | 27W | 3,500 | 130 lm/W | 4000K / 6000K | 120° |
| 430403-H3 | Sutton Plus 4ft Twin Batten - White High Output Emergency | 38W | 4,950 | 130 lm/W | 4000K / 6000K | 120° |
| 430397-H3 | Sutton Plus 6ft Single Batten - White High Output Emergency | 38W | 4,950 | 130 lm/W | 4000K / 6000K | 120° |
| 430396-H3 | Sutton Plus 5ft Twin Batten - White High Output Emergency | 50W | 6,500 | 130 lm/W | 4000K / 6000K | 120° |
| 430398-H3 | Sutton Plus 6ft Twin Batten - White High Output Emergency | 60W | 7,800 | 130 lm/W | 4000K / 6000K | 120° |
| 430402-PIR | Sutton Plus 4ft Single Batten - White PIR | 19W | 2,475 | 130 lm/W | 4000K / 6000K | 120° |
| 430395-PIR | Sutton Plus 5ft Single Batten - White PIR | 20W | 3,500 | 130 lm/W | 4000K / 6000K | 120° |
| 430403-PIR | Sutton Plus 4ft Twin Batten - White PIR | 38W | 4,950 | 130 lm/W | 4000K / 6000K | 120° |
| 430397-PIR | Sutton Plus 6ft Single Batten - White PIR | 38W | 4,950 | 130 lm/W | 4000K / 6000K | 120° |
| 430396-PIR | Sutton Plus 5ft Twin Batten - White PIR | 50W | 6,500 | 130 lm/W | 4000K / 6000K | 120° |
| 430398-PIR | Sutton Plus 6ft Twin Batten - White PIR | 60W | 7,800 | 130 lm/W | 4000K / 6000K | 120° |
| 430402-H3-PIR | Sutton Plus 4ft Single Batten - White High Output Emergency & PIR | 19W | 2,475 | 130 lm/W | 4000K / 6000K | 120° |
| 430395-H3-PIR | Sutton Plus 5ft Single Batten - White High Output Emergency & PIR | 27W | 3,500 | 130 lm/W | 4000K / 6000K | 120° |
| 430403-H3-PIR | Sutton Plus 4ft Twin Batten - White High Output Emergency & PIR | 38W | 4,950 | 130 lm/W | 4000K / 6000K | 120° |
| 430397-H3-PIR | Sutton Plus 6ft Single Batten - White High Output Emergency & PIR | 38W | 4,950 | 130 lm/W | 4000K / 6000K | 120° |
| **430396-H3-PIR** | **Sutton Plus 5ft Twin Batten - White High Output Emergency & PIR** | **50W** | **6,500** | **130 lm/W** | **4000K / 6000K** | **120°** |
| 430398-H3-PIR | Sutton Plus 6ft Twin Batten - White High Output Emergency & PIR | 60W | 7,800 | 130 lm/W | 4000K / 6000K | 120° |

**Code suffixes:** -PIR PIR sensor

### DOWNLOADS

Photometric files (LDT), installation instructions and the latest datasheet are on the product page:

**www.lumineux.co.uk/shop/430396-h3-pir-sutton-plus-batten-5ft-twin-50w-2cct-4k-6k-white-ho-emergency-integral-pir-56091**

### WARRANTY AND SUPPORT

5 years warranty. Terms at www.lumineux.co.uk/product-warranty-on-site-warranty.

Free lighting design and technical support: 01507 328031, support@lumineux.co.uk