ROUND HIGH BAY

Lockwood UGR

Lockwood UGR High Bay - Black Plug & Play 85D

Product code **430719-85**

Power	**150W**
Luminous flux	**24,000 lm**
Efficacy	**160 lm/W**
Colour temperature	**5000K**



Introduction

A slim industrial fitting designed to improve visual comfort.

Features

- Clean slim design
- Supplied with 1.5M prewired cable
- Low UGR optic lens
- Unique hollow design for superior thermals
- Plug & Play Enabled – Sensors Only

Certification and options

Plug & Play enabled

IP65 Ingress protection

IK09 Impact rating

UKCA marked

CE marked

Recommended applications

Warehousing, distribution centres, manufacturing, sports halls

Specification

Optical

Luminous flux	**24,000 lm**
Efficacy	**160 lm/W**
Colour temperature	**5000K**

Electrical

Power	**150W**
Frequency	**50 Hz / 60 Hz**

Lifetime and warranty

Replaceable driver	**No**
Replaceable light source	**No**

Values are nominal. Luminous flux and efficacy are for the complete luminaire. Specifications may change without notice; the product page always carries the latest version.

Dimensions

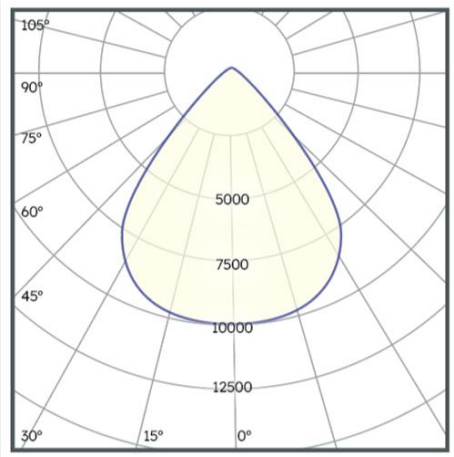

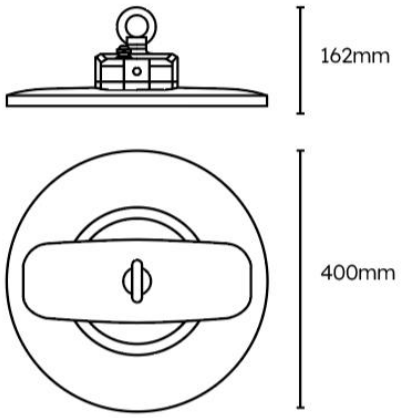

Ordering information · Lockwood

CODE	DESCRIPTION	POWER	LUMINOUS FLUX	EFFICACY	CCT	BEAM
430717-85	Lockwood UGR High Bay - Black Plug & Play 85D	100W	16,000	160 lm/W	5000K	
430718-85	Lockwood UGR High Bay - Black Plug & Play 85D	120W	19,200	160 lm/W	5000K	
430719-85	**Lockwood UGR High Bay - Black Plug & Play 85D**	**150W**	**24,000**	**160 lm/W**	**5000K**	
430720-85	Lockwood UGR High Bay - Black Plug & Play 85D	200W	32,000	160 lm/W	5000K	

DOWNLOADS

Photometric files (LDT), installation instructions and the latest datasheet are on the product page:

www.lumineux.co.uk/shop/430719-85-lockwood-high-bay-150w-5000k-ip65-black-85d-1-10v-zhaga-59339

WARRANTY AND SUPPORT

Terms at www.lumineux.co.uk/product-warranty-on-site-warranty.

Free lighting design and technical support: 01507 328031, support@lumineux.co.uk