SIERRA

# truSmart Sierra

truSmart Sierra 4ft Twin Academic Batten - White

Product code **440012**

| | |
|---|---|
| Power | **40W** |
| Luminous flux | **5,000 lm** |
| Efficacy | **125 lm/W** |
| Colour temperature | **4000K** |



## Features

- Academic Smart Batten Twin
- Robust steel body
- Multi 20mm conduit entry
- Glare reducing Opal or Prismatic ribbed polycarbonate diffuser options
- Opal 120 lm/W or Prismatic 140lm/W options
- Self-test emergency available
- 5 Year Product Warranty

## Certification and options

IP20 Ingress protection

UKCA marked

<19 UGR Low glare UGR<19

CE marked

# Specification

## Optical

| | |
|---|---|
| Luminous flux | **5,000 lm** |
| Efficacy | **125 lm/W** |
| Colour temperature | **4000K** |

## Electrical

| | |
|---|---|
| Power | **40W** |
| Frequency | **50 Hz / 60 Hz** |

## Lifetime and warranty

| | |
|---|---|
| Replaceable driver | **No** |
| Replaceable light source | **No** |

Values are nominal. Luminous flux and efficacy are for the complete luminaire. Specifications may change without notice; the product page always carries the latest version.

## Dimensions

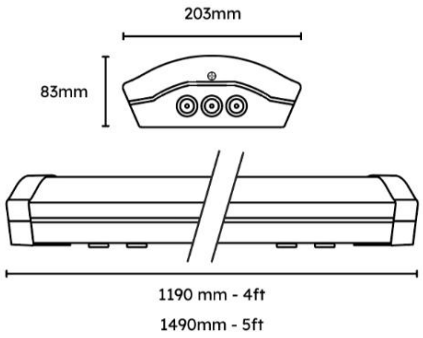


## Compatible modules and accessories

| CODE | DESCRIPTION |
|---|---|
| 440039 | truSmart Licence Node SaaS platform |

### DOWNLOADS

Photometric files (LDT), installation instructions and the latest datasheet are on the product page:

**www.lumineux.co.uk/shop/440012-trusmart-sierra-academic-batten-40w-4ft-twin-4000k-white-59513**

### WARRANTY AND SUPPORT

Terms at www.lumineux.co.uk/product-warranty-on-site-warranty.

Free lighting design and technical support: 01507 328031, support@lumineux.co.uk