SIERRA

truSmart Sierra

truSmart Sierra 5ft Twin Academic Batten - White

Product code **440013**

Power	**58W**
Luminous flux	**7,250 lm**
Efficacy	**125 lm/W**
Colour temperature	**4000K**



Features

- Academic Smart Batten Twin
- Robust steel body
- Multi 20mm conduit entry
- Glare reducing Opal or Prismatic ribbed polycarbonate diffuser options
- Opal 120 lm/W or Prismatic 140lm/W options
- Self-test emergency available
- 5 Year Product Warranty

Certification and options

IP20 Ingress protection

UKCA marked

<19 UGR Low glare UGR<19

CE marked

Specification

Optical

Luminous flux	**7,250 lm**
Efficacy	**125 lm/W**
Colour temperature	**4000K**

Electrical

Power	**58W**
Frequency	**50 Hz / 60 Hz**

Lifetime and warranty

Replaceable driver	**No**
Replaceable light source	**No**

Values are nominal. Luminous flux and efficacy are for the complete luminaire. Specifications may change without notice; the product page always carries the latest version.

Dimensions

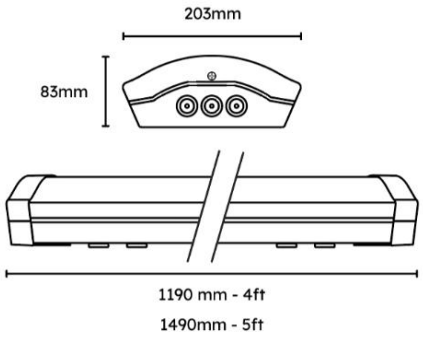

Compatible modules and accessories

CODE	DESCRIPTION
440039	truSmart Licence Node SaaS platform

DOWNLOADS

Photometric files (LDT), installation instructions and the latest datasheet are on the product page:

www.lumineux.co.uk/shop/440013-trusmart-sierra-academic-batten-43w-5ft-twin-4000k-white-59514

WARRANTY AND SUPPORT

Terms at www.lumineux.co.uk/product-warranty-on-site-warranty.

Free lighting design and technical support: 01507 328031, support@lumineux.co.uk