CLIFTON

truSmart Clifton

truSmart Clifton Fire Rated Commercial Downlight - Black 60D

Product code **430883**

Power	**8W**
Luminous flux	**1,275 lm**
Efficacy	**150 lm/W**
Colour temperature	**2700-6500K**
Beam angle	**60°**
Lifetime L70	**50,000 h**
Warranty	**5 years**



Features

- Complies with parts B, C, E and L of Building Regulations
- Suitable for solid or stranded cable Ø 0.75 – 2.5mm2
- Replacable light source
- Suitable for Care homes, Hotels & Corridors
- Fully tested for 30, 60 and 90 minutes fire rated
- Meets STA Pattern Book fire test requirements
- Quick connector with LENNEL lever terminal
- Dimmable via truSmart app

Certification and options



Tunable white | Ingress protection | UKCA marked | CE marked









Specification

Optical

Luminous flux	**1,275 lm**
Efficacy	**150 lm/W**
Colour temperature	**2700-6500K**
Colour selection	**Tunable**
Colour rendering	**Ra 80**
Beam angle	**60°**
Flicker	**Flicker Free**

Electrical

Power	**8W**
Supply voltage	**220-240V AC**
Frequency	**50 Hz / 60 Hz**
Driver type	**CC**
Driver	**Lumineux**
Dimming	**truSmart**

Lifetime and warranty

Lifetime L70	**50,000 h**
Warranty	**5 years**
Replaceable driver	**No**
Replaceable light source	**No**

Construction

Location	**Internal**

Installation

Mounting	**BESA/Conduit**
Ambient temperature	**-10 to +45 °C**

Values are nominal. Luminous flux and efficacy are for the complete luminaire. Specifications may change without notice; the product page always carries the latest version.

Dimensions

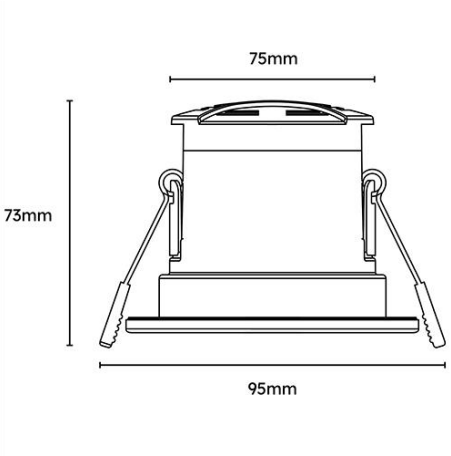

Compatible modules and accessories

CODE	DESCRIPTION
440039	truSmart Licence Node SaaS platform

DOWNLOADS

Photometric files (LDT), installation instructions and the latest datasheet are on the product page:

www.lumineux.co.uk/shop/430883-trusmart-clifton-fire-rated-commercial-downlight-8w-tunable-ip65-black-60d-59554

WARRANTY AND SUPPORT

5 years warranty. Terms at www.lumineux.co.uk/product-warranty-on-site-warranty.

Free lighting design and technical support: 01507 328031, support@lumineux.co.uk