SWITCH

truSmart Blanco Wall Switch 2 Way Kinetic

truSmart Blanco Wall Switch 2 Way Kinetic

Product code **440022**



Features

- Sleek Four Button Design
- Simple and User Friendly Set up
- CR2430 battery required (Not Included)

Certification and options

truSmart enabled

UKCA marked

CE marked

Specification

Electrical

Frequency	**50 Hz / 60 Hz**

Values are nominal. Specifications may change without notice; the product page always carries the latest version.

Dimensions

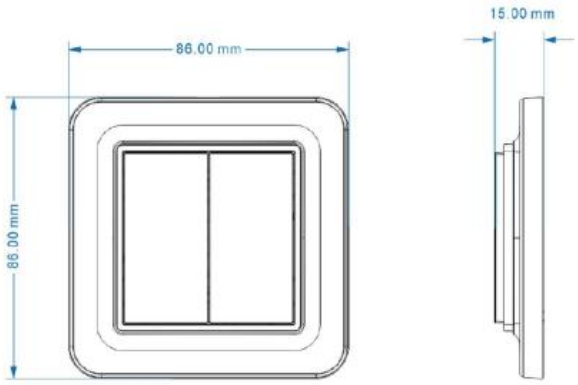

Compatible modules and accessories

CODE	DESCRIPTION
440039	truSmart Licence Node SaaS platform

DOWNLOADS

Photometric files (LDT), installation instructions and the latest datasheet are on the product page:

www.lumineux.co.uk/shop/440022-trusmart-blanco-wall-switch-2-way-kinetic-59618

WARRANTY AND SUPPORT

Terms at www.lumineux.co.uk/product-warranty-on-site-warranty.

Free lighting design and technical support: 01507 328031, support@lumineux.co.uk