LED BATTEN

Holywell

Holywell 4ft Single Batten - White Microwave

Product code **431300-MW**

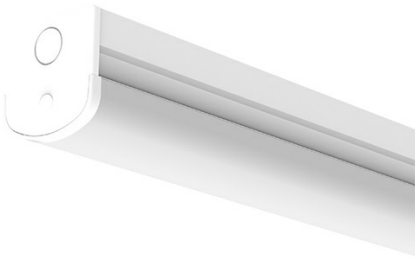

Power	**19W**
Luminous flux	**3,050 lm**
Efficacy	**160 lm/W**
Colour temperature	**4000K**
Beam angle	**120°**
Protection	**IP20 · IK06**
Lifetime L70	**54,000 h**
Warranty	**5 years**

Introduction

4000K, IP65, up to 160 lm/W.

Features

- Unique opal diffuser design for optimum performance and light distribution
- Steel body construction with powder coat finish
- Conduit entry points at both ends
- Suitable for central BESA mounting
- Additional screw to secure end cap

Certification and options

Plug & Play enabled

IP20 Ingress protection

UKCA marked

Energy class B

CE marked

Recommended applications

Plant rooms, stores, corridors, workshops, car parks





Specification

Optical

Luminous flux	**3,050 lm**
Efficacy	**160 lm/W**
Colour temperature	**4000K**
Colour rendering	**Ra 80**
Beam angle	**120°**
Flicker	**Flicker Free**

Electrical

Power	**19W**
Supply voltage	**220-240V AC**
Frequency	**50 Hz / 60 Hz**
Driver type	**CC**
Driver	**Lifud**
Dimming	**Fixed**

Lifetime and warranty

Lifetime L70	**54,000 h**
Lifetime L80	**54,000 h**
Lifetime L90	**34,000 h**
Energy class	**B**
Warranty	**5 years**
Replaceable driver	**Professional**
Replaceable light source	**Professional**

Construction

Ingress protection	**IP20**
Impact resistance	**IK06**
Electrical class	**Class I**
Body	**Steel**
Diffuser	**Polycarbonate**
Colour (RAL)	**RAL 9003**
Location	**Internal**
Dimensions (L x W x H)	**1203 x 64 x 66 mm**

Installation

Mounting	**BESA/Conduit**
Connection	**Push Fit Terminal**
Ambient temperature	**0 to +40 °C**

Sensor and controls · from 430916

Sensor	**430916** Alwen Linear Microwave Sensor 220-240V AC 200W Max Plug & Play
Technology	**Microwave**
Switching	**On-Off**
Detection radius	**1.5 - 5 m**
Hold time	**5 sec - 30 min**
Max. mounting height	**6 m**
Grouping	**Standalone**
Standby power	**0.5 W**

Values are nominal. Luminous flux and efficacy are for the complete luminaire. Specifications may change without notice; the product page always carries the latest version.

Dimensions

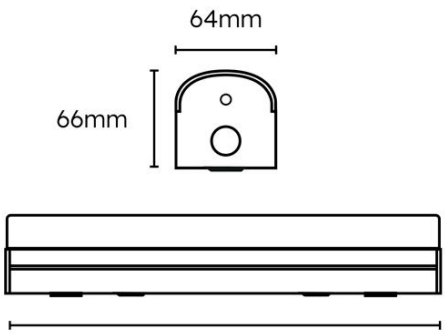

4ft: 1203mm, **5ft:** 1503mm
6ft: 1803mm

Ordering information · Holywell

CODE	DESCRIPTION	POWER	LUMINOUS FLUX	EFFICACY	CCT	BEAM
431300	Holywell 4ft Single Batten - White	19W	3,050	160 lm/W	4000K	120°
431302	Holywell 5ft Single Batten - White	20W	3,200	160 lm/W	4000K	120°
431301	Holywell 4ft Twin Batten - White	30W	4,800	160 lm/W	4000K	120°
431304	Holywell 6ft Single Batten - White	30W	4,800	160 lm/W	4000K	120°
431303	Holywell 5ft Twin Batten - White	43W	6,875	160 lm/W	4000K	120°
431305	Holywell 6ft Twin Batten - White	50W	8,000	160 lm/W	4000K	120°
431300-DA	Holywell 4ft Single Batten - White DALI	19W	3,050	160 lm/W	4000K	120°
431302-DA	Holywell 5ft Single Batten - White DALI	20W	3,200	160 lm/W	4000K	120°
431301-DA	Holywell 4ft Twin Batten - White DALI	30W	4,800	160 lm/W	4000K	120°
431304-DA	Holywell 6ft Single Batten - White DALI	30W	4,800	160 lm/W	4000K	120°
431303-DA	Holywell 5ft Twin Batten - White DALI	43W	6,875	160 lm/W	4000K	120°
431305-DA	Holywell 6ft Twin Batten - White DALI	50W	8,000	160 lm/W	4000K	120°
431300-E3	Holywell 4ft Single Batten - White E-SEL3 Emergency	19W	3,050	160 lm/W	4000K	120°
431300-DA-E3	Holywell 4ft Single Batten - White E-SEL3 Emergency & DALI	19W	3,050	160 lm/W	4000K	120°
431302-E3	Holywell 5ft Single Batten - White E-SEL3 Emergency	20W	3,200	160 lm/W	4000K	120°
431302-DA-E3	Holywell 5ft Single Batten - White DALI	20W	3,200	160 lm/W	4000K	120°
431301-E3	Holywell 4ft Twin Batten - White E-SEL3 Emergency	30W	4,800	160 lm/W	4000K	120°
431304-E3	Holywell 6ft Single Batten - White E-SEL3 Emergency	30W	4,800	160 lm/W	4000K	120°
431304-DA-E3	Holywell 6ft Single Batten - White DALI	30W	4,800	160 lm/W	4000K	120°
431303-E3	Holywell 5ft Twin Batten - White E-SEL3 Emergency	43W	6,875	160 lm/W	4000K	120°
431303-DA-E3	Holywell 5ft Twin Batten - White DALI	43W	6,875	160 lm/W	4000K	120°
431305-E3	Holywell 6ft Twin Batten - White E-SEL3 Emergency	50W	8,000	160 lm/W	4000K	120°
431305-DA-E3	Holywell 6ft Twin Batten - White DALI	50W	8,000	160 lm/W	4000K	120°
431300-MW	**Holywell 4ft Single Batten - White Microwave**	**19W**	**3,050**	**160 lm/W**	**4000K**	**120°**
431302-MW	Holywell 5ft Single Batten - White Microwave	20W	3,200	160 lm/W	4000K	120°
431301-MW	Holywell 4ft Twin Batten - White Microwave	30W	4,800	160 lm/W	4000K	120°
431304-MW	Holywell 6ft Single Batten - White Microwave	30W	4,800	160 lm/W	4000K	120°
431303-MW	Holywell 5ft Twin Batten - White Microwave	43W	6,875	160 lm/W	4000K	120°
431305-MW	Holywell 6ft Twin Batten - White Microwave	50W	8,000	160 lm/W	4000K	120°
431300-E3-MW	Holywell 4ft Single Batten - White E-SEL3 Emergency & Microwave	19W	3,050	160 lm/W	4000K	120°
431302-E3-MW	Holywell 5ft Single Batten - White E-SEL3 Emergency & Microwave	20W	3,200	160 lm/W	4000K	120°
431301-E3-MW	Holywell 4ft Twin Batten - White E-SEL3 Emergency & Microwave	30W	4,800	160 lm/W	4000K	120°
431304-E3-MW	Holywell 6ft Single Batten - White E-SEL3 Emergency & Microwave	30W	4,800	160 lm/W	4000K	120°
431303-E3-MW	Holywell 5ft Twin Batten - White E-SEL3 Emergency & Microwave	43W	6,875	160 lm/W	4000K	120°
431305-E3-MW	Holywell 6ft Twin Batten - White E-SEL3 Emergency & Microwave	50W	8,000	160 lm/W	4000K	120°

Code suffixes: -E3 E-SEL3 emergency, 3 hour -MW Microwave sensor -DA DALI dimming

Compatible modules and accessories

	CODE	DESCRIPTION
	430962	Grafham 3.5W Conversion Pack 50-300V DC 0-40mA LifePO4 3.2V DC 3.2Ah Plug & Play E-SEL3 Emergency
	430916	Alwen Linear Microwave Sensor 220-240V AC 200W Max Plug & Play
	401752	Alwen ON/OFF PIR External Mount White (Batten)

DOWNLOADS

Photometric files (LDT), installation instructions and the latest datasheet are on the product page:

www.lumineux.co.uk/shop/431300-mw-holywell-batten-4ft-single-19w-4000k-white-plug-play-microwave-59739

WARRANTY AND SUPPORT

5 years warranty. Terms at www.lumineux.co.uk/product-warranty-on-site-warranty.

Free lighting design and technical support: 01507 328031, support@lumineux.co.uk