WALL LIGHT

Hurworth Mini

Hurworth Mini Wall Pack - Black Dusk till Dawn

Product code **431200-DD**



Power	**12W**
Luminous flux	**1,250 lm**
Efficacy	**105 lm/W**
Colour temperature	**3000K / 4000K / 6000K**
Beam angle	**110°**
Protection	**IP65 · IK08**
Lifetime L70	**60,000 h**
Warranty	**3 years**

Introduction

Colour selectable, IP65, up to 105 lm/W.

Features

- Standard, emergency and dusk to dawn options available.
- Tough body construction with polycarbonate diffuser
- LED Lifespan 40,000 hours L70

Certification and options

3CCT — Colour selectable
IP65 — Ingress protection
IK08 — Impact rating
UKCA — UKCA marked
CE — CE marked

Recommended applications

Entrances, yards, building perimeters

Specification

Optical

Luminous flux	**1,250 lm**
Efficacy	**105 lm/W**
Colour temperature	**3000K / 4000K / 6000K**
Colour selection	**3CCT**
Colour rendering	**Ra 80**
Beam angle	**110°**

Electrical

Power	**12W**
Supply voltage	**220-240V AC**
Frequency	**50 Hz / 60 Hz**
Driver type	**CC**
Driver	**Lumineux**
Dimming	**Fixed**
Standby power	**1.0 W**

Lifetime and warranty

Lifetime L70	**60,000 h**
Energy class	**D**
Warranty	**3 years**
Replaceable driver	**Professional**
Replaceable light source	**Professional**

Construction

Ingress protection	**IP65**
Impact resistance	**IK08**
Electrical class	**Class I**
Body	**Polycarbonate**
Diffuser	**Polycarbonate**
Colour (RAL)	**RAL 9005**
Location	**External**
Dimensions (L x W x H)	**275 x 185 x 74 mm**

Installation

Mounting	**BESA/Conduit**
Connection	**Push Terminal**
Ambient temperature	**-20 to +40 °C**

Values are nominal. Luminous flux and efficacy are for the complete luminaire. Specifications may change without notice; the product page always carries the latest version.

Dimensions

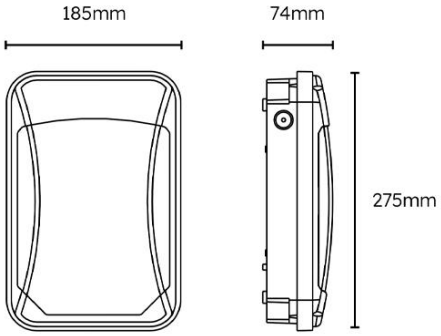

Ordering information · Hurworth Mini

CODE	DESCRIPTION	POWER	LUMINOUS FLUX	EFFICACY	CCT	BEAM
431200	Hurworth Mini Wall Pack - Black	12W	1,250	105 lm/W	3000K / 4000K / 6000K	110°
431200-M3	Hurworth Mini Wall Pack - Black Emergency	12W	1,250	105 lm/W	3000K / 4000K / 6000K	110°
431200-DD	**Hurworth Mini Wall Pack - Black Dusk till Dawn**	**12W**	**1,250**	**105 lm/W**	**3000K / 4000K / 6000K**	**110°**
431200-M3-DD	Hurworth Mini Wall Pack - Black Emergency & Dusk till Dawn	12W	1,250	105 lm/W	3000K / 4000K / 6000K	110°

DOWNLOADS

Photometric files (LDT), installation instructions and the latest datasheet are on the product page:

www.lumineux.co.uk/shop/431200-dd-hurworth-mini-wallpack-12w-3cct-black-ip65-photocell-59755

WARRANTY AND SUPPORT

3 years warranty. Terms at www.lumineux.co.uk/product-warranty-on-site-warranty.

Free lighting design and technical support: 01507 328031, support@lumineux.co.uk