LED BATTEN

# Holywell

Holywell 4ft Twin Batten - White DALI

Product code **431301-DA**

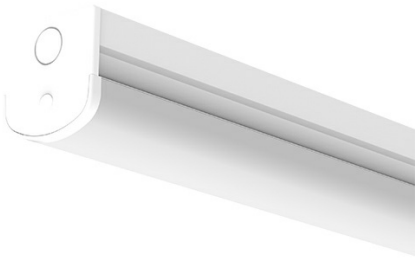

| | |
|---|---|
| Power | **30W** |
| Luminous flux | **4,800 lm** |
| Efficacy | **160 lm/W** |
| Colour temperature | **4000K** |
| Beam angle | **120°** |
| Protection | **IP20 · IK06** |
| Lifetime L70 | **54,000 h** |
| Warranty | **5 years** |

## Introduction

4000K, IP65, up to 160 lm/W.

## Features

- Unique opal diffuser design for optimum performance and light distribution
- Steel body construction with powder coat finish
- Conduit entry points at both ends
- Suitable for central BESA mounting
- Additional screw to secure end cap

## Certification and options

Plug & Play enabled

IP20 Ingress protection

UKCA marked

Energy class B

CE marked

## Recommended applications

Plant rooms, stores, corridors, workshops, car parks





# Specification

## Optical

| | |
|---|---|
| Luminous flux | **4,800 lm** |
| Efficacy | **160 lm/W** |
| Colour temperature | **4000K** |
| Colour rendering | **Ra 80** |
| Beam angle | **120°** |
| Flicker | **Flicker Free** |

## Electrical

| | |
|---|---|
| Power | **30W** |
| Supply voltage | **220-240V AC** |
| Frequency | **50 Hz / 60 Hz** |
| Driver type | **CC** |
| Driver | **Helvar** |
| Dimming | **DALI** |

## Lifetime and warranty

| | |
|---|---|
| Lifetime L70 | **54,000 h** |
| Lifetime L80 | **54,000 h** |
| Lifetime L90 | **34,000 h** |
| Energy class | **B** |
| Warranty | **5 years** |
| Replaceable driver | **Professional** |
| Replaceable light source | **Professional** |

## Construction

| | |
|---|---|
| Ingress protection | **IP20** |
| Impact resistance | **IK06** |
| Electrical class | **Class I** |
| Body | **Steel** |
| Diffuser | **Polycarbonate** |
| Colour (RAL) | **RAL 9003** |
| Location | **Internal** |
| Dimensions (L x W x H) | **1203 x 64 x 66 mm** |

## Installation

| | |
|---|---|
| Mounting | **BESA/Conduit** |
| Connection | **Push Fit Terminal** |
| Ambient temperature | **0 to +40 °C** |

Values are nominal. Luminous flux and efficacy are for the complete luminaire. Specifications may change without notice; the product page always carries the latest version.

## Dimensions

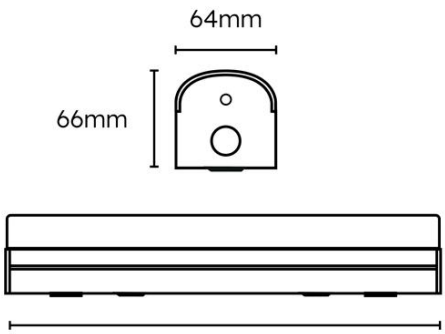


**4ft:** 1203mm, **5ft:** 1503mm
**6ft:** 1803mm

## Ordering information · Holywell

| CODE | DESCRIPTION | POWER | LUMINOUS FLUX | EFFICACY | CCT | BEAM |
|---|---|---|---|---|---|---|
| 431300 | Holywell 4ft Single Batten - White | 19W | 3,050 | 160 lm/W | 4000K | 120° |
| 431302 | Holywell 5ft Single Batten - White | 20W | 3,200 | 160 lm/W | 4000K | 120° |
| 431301 | Holywell 4ft Twin Batten - White | 30W | 4,800 | 160 lm/W | 4000K | 120° |
| 431304 | Holywell 6ft Single Batten - White | 30W | 4,800 | 160 lm/W | 4000K | 120° |
| 431303 | Holywell 5ft Twin Batten - White | 43W | 6,875 | 160 lm/W | 4000K | 120° |
| 431305 | Holywell 6ft Twin Batten - White | 50W | 8,000 | 160 lm/W | 4000K | 120° |
| 431300-DA | Holywell 4ft Single Batten - White DALI | 19W | 3,050 | 160 lm/W | 4000K | 120° |
| 431302-DA | Holywell 5ft Single Batten - White DALI | 20W | 3,200 | 160 lm/W | 4000K | 120° |
| **431301-DA** | **Holywell 4ft Twin Batten - White DALI** | **30W** | **4,800** | **160 lm/W** | **4000K** | **120°** |
| 431304-DA | Holywell 6ft Single Batten - White DALI | 30W | 4,800 | 160 lm/W | 4000K | 120° |
| 431303-DA | Holywell 5ft Twin Batten - White DALI | 43W | 6,875 | 160 lm/W | 4000K | 120° |
| 431305-DA | Holywell 6ft Twin Batten - White DALI | 50W | 8,000 | 160 lm/W | 4000K | 120° |
| 431300-E3 | Holywell 4ft Single Batten - White E-SEL3 Emergency | 19W | 3,050 | 160 lm/W | 4000K | 120° |
| 431300-DA-E3 | Holywell 4ft Single Batten - White E-SEL3 Emergency & DALI | 19W | 3,050 | 160 lm/W | 4000K | 120° |
| 431302-E3 | Holywell 5ft Single Batten - White E-SEL3 Emergency | 20W | 3,200 | 160 lm/W | 4000K | 120° |
| 431302-DA-E3 | Holywell 5ft Single Batten - White DALI | 20W | 3,200 | 160 lm/W | 4000K | 120° |
| 431301-E3 | Holywell 4ft Twin Batten - White E-SEL3 Emergency | 30W | 4,800 | 160 lm/W | 4000K | 120° |
| 431304-E3 | Holywell 6ft Single Batten - White E-SEL3 Emergency | 30W | 4,800 | 160 lm/W | 4000K | 120° |
| 431304-DA-E3 | Holywell 6ft Single Batten - White DALI | 30W | 4,800 | 160 lm/W | 4000K | 120° |
| 431303-E3 | Holywell 5ft Twin Batten - White E-SEL3 Emergency | 43W | 6,875 | 160 lm/W | 4000K | 120° |
| 431303-DA-E3 | Holywell 5ft Twin Batten - White DALI | 43W | 6,875 | 160 lm/W | 4000K | 120° |
| 431305-E3 | Holywell 6ft Twin Batten - White E-SEL3 Emergency | 50W | 8,000 | 160 lm/W | 4000K | 120° |
| 431305-DA-E3 | Holywell 6ft Twin Batten - White DALI | 50W | 8,000 | 160 lm/W | 4000K | 120° |
| 431300-MW | Holywell 4ft Single Batten - White Microwave | 19W | 3,050 | 160 lm/W | 4000K | 120° |
| 431302-MW | Holywell 5ft Single Batten - White Microwave | 20W | 3,200 | 160 lm/W | 4000K | 120° |
| 431301-MW | Holywell 4ft Twin Batten - White Microwave | 30W | 4,800 | 160 lm/W | 4000K | 120° |
| 431304-MW | Holywell 6ft Single Batten - White Microwave | 30W | 4,800 | 160 lm/W | 4000K | 120° |
| 431303-MW | Holywell 5ft Twin Batten - White Microwave | 43W | 6,875 | 160 lm/W | 4000K | 120° |
| 431305-MW | Holywell 6ft Twin Batten - White Microwave | 50W | 8,000 | 160 lm/W | 4000K | 120° |
| 431300-E3-MW | Holywell 4ft Single Batten - White E-SEL3 Emergency & Microwave | 19W | 3,050 | 160 lm/W | 4000K | 120° |
| 431302-E3-MW | Holywell 5ft Single Batten - White E-SEL3 Emergency & Microwave | 20W | 3,200 | 160 lm/W | 4000K | 120° |
| 431301-E3-MW | Holywell 4ft Twin Batten - White E-SEL3 Emergency & Microwave | 30W | 4,800 | 160 lm/W | 4000K | 120° |
| 431304-E3-MW | Holywell 6ft Single Batten - White E-SEL3 Emergency & Microwave | 30W | 4,800 | 160 lm/W | 4000K | 120° |
| 431303-E3-MW | Holywell 5ft Twin Batten - White E-SEL3 Emergency & Microwave | 43W | 6,875 | 160 lm/W | 4000K | 120° |
| 431305-E3-MW | Holywell 6ft Twin Batten - White E-SEL3 Emergency & Microwave | 50W | 8,000 | 160 lm/W | 4000K | 120° |

**Code suffixes:** -E3 E-SEL3 emergency, 3 hour  -MW Microwave sensor  -DA DALI dimming

## Compatible modules and accessories

| | CODE | DESCRIPTION |
|---|---|---|
|  | 430962 | Grafham 3.5W Conversion Pack 50-300V DC 0-40mA LifePO4 3.2V DC 3.2Ah Plug & Play E-SEL3 Emergency |
|  | 430916 | Alwen Linear Microwave Sensor 220-240V AC 200W Max Plug & Play |
|  | 401752 | Alwen ON/OFF PIR External Mount White (Batten) |

### DOWNLOADS

Photometric files (LDT), installation instructions and the latest datasheet are on the product page:

**www.lumineux.co.uk/shop/431301-da-holywell-batten-4ft-twin-30w-4000k-white-plug-play-dali-59973**

### WARRANTY AND SUPPORT

5 years warranty. Terms at www.lumineux.co.uk/product-warranty-on-site-warranty.

Free lighting design and technical support: 01507 328031, support@lumineux.co.uk