LED BATTEN

Sutton

Sutton 5ft Single Batten - White E-SEL3 Emergency

Product code **430040-E3**



Power	**20W**
Luminous flux	**3,200 lm**
Efficacy	**160 lm/W**
Colour temperature	**4000K**
Beam angle	**120°**
Protection	**IP20 · IK06**
Lifetime L70	**50,000 h**
Warranty	**5 years**

Introduction

4000K, IP65, up to 160 lm/W.

Features

- Frosted, ribbed polycarbonate diffuser to reduce glare
- Improved thermals utilising aluminium back PCBs
- H3 - High Output Emergency 440lm option available
- Additional screw to secure end cap
- Push-fit terminals
- 20mm conduit entry

Certification and options

IP20 Ingress protection · UKCA marked · Energy class B · CE marked

Recommended applications

Plant rooms, stores, corridors, workshops, car parks

Specification

Optical

Luminous flux	**3,200 lm**
Efficacy	**160 lm/W**
Colour temperature	**4000K**
Colour rendering	**Ra 80**
Beam angle	**120°**
Flicker	**Flicker Free**

Electrical

Power	**20W**
Supply voltage	**220-240**
Frequency	**50 Hz / 60 Hz**
Driver type	**CC**
Driver	**Lifud**
Dimming	**Fixed**

Lifetime and warranty

Lifetime L70	**50,000 h**
Energy class	**B**
Warranty	**5 years**
Replaceable driver	**Professional**
Replaceable light source	**Professional**

Construction

Ingress protection	**IP20**
Impact resistance	**IK06**
Electrical class	**Class I**
Body	**Steel**
Diffuser	**Polycarbonate**
Colour (RAL)	**RAL 9003**
Location	**Internal**

Installation

Mounting	**BESA/Conduit**
Connection	**Push Fit Terminal**
Ambient temperature	**0 to +40 °C**

Values are nominal. Luminous flux and efficacy are for the complete luminaire. Specifications may change without notice; the product page always carries the latest version.

Dimensions

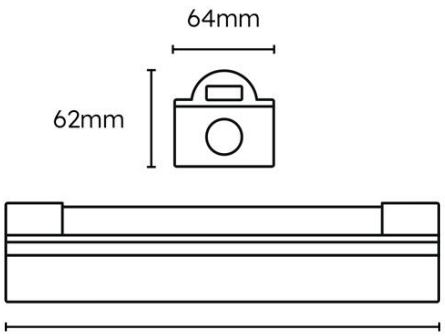

4ft: 1220mm, **5ft:** 1524mm
6ft: 1829mm

Ordering information · Sutton

CODE	DESCRIPTION	POWER	LUMINOUS FLUX	EFFICACY	CCT	BEAM
430038	Sutton 4ft Single Batten - White	19W	3,050	160 lm/W	4000K	120°
430040	Sutton 5ft Single Batten - White	20W	3,200	160 lm/W	4000K	120°
430042	Sutton 6ft Single Batten - White	30W	4,800	160 lm/W	4000K	120°
430039	Sutton 4ft Twin Batten - White	38W	6,080	160 lm/W	4000K	120°
430041	Sutton 5ft Twin Batten - White	43W	6,875	160 lm/W	4000K	120°
430043	Sutton 6ft Twin Batten - White	50W	8,000	160 lm/W	4000K	120°
430038-DA	Sutton 4ft Single Batten - White DALI	19W	3,050	160 lm/W	4000K	120°
430039-DA	Sutton 4ft Twin Batten - White DALI	38W	6,080	160 lm/W	4000K	120°
430042-DA	Sutton 6ft Single Batten - White DALI	38W	4,800	160 lm/W	4000K	120°
430041-DA	Sutton 5ft Twin Batten - White DALI	50W	6,875	160 lm/W	4000K	120°
430043-DA	Sutton 6ft Twin Batten - White DALI	50W	8,000	160 lm/W	4000K	120°
430038-H3	Sutton 4ft Single Batten - White High Output Emergency	19W	3,050	160 lm/W	4000K	120°
430038-E3	Sutton 4ft Single Batten - White E-SEL3 Emergency	19W	3,050	160 lm/W	4000K	120°
430038-H3-DA	Sutton 4ft Single Batten - White DALI & High Output Emergency	19W	3,050	160 lm/W	4000K	120°
430040-H3	Sutton 5ft Single Batten - White High Output Emergency	20W	3,200	160 lm/W	4000K	120°
430040-E3	**Sutton 5ft Single Batten - White E-SEL3 Emergency**	**20W**	**3,200**	**160 lm/W**	**4000K**	**120°**
430040-H3-DA	Sutton 5ft Single Batten - White DALI & High Output Emergency	27W	3,200	160 lm/W	4000K	120°
430042-E3	Sutton 6ft Single Batten - White E-SEL3 Emergency	30W	4,800	160 lm/W	4000K	120°
430039-E3	Sutton 4ft Twin Batten - White E-SEL3 Emergency	38W	5,125	135 lm/W	4000K	120°
430039-H3	Sutton 4ft Twin Batten - White High Output Emergency	38W	6,080	160 lm/W	4000K	120°
430042-H3	Sutton 6ft Single Batten - White High Output Emergency	38W	4,800	160 lm/W	4000K	120°
430039-H3-DA	Sutton 4ft Twin Batten - White High Output Emergency & DALI	38W	6,080	160 lm/W	4000K	120°
430041-H3	Sutton 5ft Twin Batten - White High Output Emergency	50W	6,875	160 lm/W	4000K	120°
430043-H3	Sutton 6ft Twin Batten - White High Output Emergency	50W	8,000	160 lm/W	4000K	120°
430043-E3	Sutton 6ft Twin Batten - White E-SEL3 Emergency	50W	8,000	160 lm/W	4000K	120°
430041-H3-DA	Sutton 5ft Twin Batten - White DALI & High Output Emergency	50W	6,875	160 lm/W	4000K	120°
430043-H3-DA	Sutton 6ft Twin Batten - White DALI & High Output Emergency	50W	8,000	160 lm/W	4000K	120°
430038-PIR	Sutton 4ft Single Batten - White PIR	19W	3,050	160 lm/W	4000K	120°
430038-H3-PIR	Sutton 4ft Single Batten - White High Output Emergency & PIR	19W	3,050	160 lm/W	4000K	120°

Code suffixes: -E3 E-SEL3 emergency, 3 hour -PIR PIR sensor -DA DALI dimming

Compatible modules and accessories

	CODE	DESCRIPTION
	401752	Alwen ON/OFF PIR External Mount White (Batten)
	401755	Alwen ON/OFF PIR Remote (Batten)

DOWNLOADS

Photometric files (LDT), installation instructions and the latest datasheet are on the product page:

www.lumineux.co.uk/shop/430040-e3-sutton-batten-5ft-single-20w-4000k-white-plug-play-e-sel3-emergency-60075

WARRANTY AND SUPPORT

5 years warranty. Terms at www.lumineux.co.uk/product-warranty-on-site-warranty.

Free lighting design and technical support: 01507 328031, support@lumineux.co.uk