LED BATTEN

Olton UGR

Olton UGR 4ft Batten - White E-SEL3 Emergency & Microwave

Product code **430645-E3-MW**



Power	**18W / 32W**
Luminous flux	**2,525 / 4,475 lm**
Efficacy	**140 lm/W**
Colour temperature	**4000K**
Beam angle	**75°**
Protection	**IP20 · IK03**
Lifetime L70	**50,000 h**
Warranty	**5 years**

Introduction

Wattage selectable, up to 140 lm/W.

Features

- Robust steel body
- Ribbed polycarbonate diffuser to reduce glare
- Multi 20mm conduit entry
- Switchable wattage available on internal driver
- High output self-test emergency available

Certification and options

Wattage selectable

Low glare UGR<19

UKCA marked

Energy class B

CE marked

Recommended applications

Plant rooms, stores, corridors, workshops, car parks



Specification

Optical

Luminous flux	**2,525 / 4,475 lm**
Efficacy	**140 lm/W**
Colour temperature	**4000K**
Colour rendering	**Ra 80**
Colour consistency	**5 SDCM**
Beam angle	**75°**
Glare (UGR)	**<19**
Flicker	**Flicker Free**

Electrical

Power	**18W / 32W**
Supply voltage	**220-240V AC**
Frequency	**50 Hz / 60 Hz**
Driver type	**CC**
Driver	**Lumineux**
Dimming	**Fixed**

Lifetime and warranty

Lifetime L70	**50,000 h**
Energy class	**B**
Warranty	**5 years**

Construction

Ingress protection	**IP20**
Impact resistance	**IK03**
Electrical class	**Class I**
Body	**Steel**
Diffuser	**Polycarbonate**
Colour (RAL)	**RAL 9003**
Location	**Internal**

Installation

Mounting	**BESA/Conduit**
Connection	**Push Fit Terminal**
Ambient temperature	**0 to +45 °C**

Values are nominal. Luminous flux and efficacy are for the complete luminaire. Specifications may change without notice; the product page always carries the latest version.

Dimensions

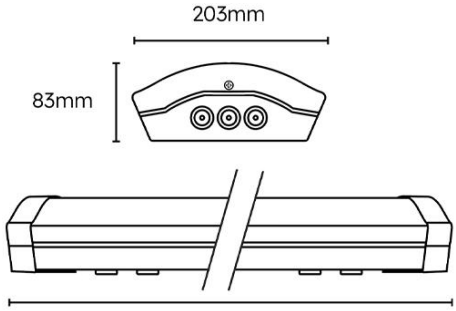

4ft: 1190mm, **5ft:** 1490mm

Ordering information · Olton UGR

CODE	DESCRIPTION	POWER	LUMINOUS FLUX	EFFICACY	CCT	BEAM
430645	Olton UGR 4ft Batten - White	18W / 32W	2,525 / 4,475	140 lm/W	4000K	75°
430646	Olton UGR 5ft Batten - White	24W / 43W	3,350 / 6,025	140 lm/W	4000K	75°
430645-E3	Olton UGR 4ft Batten - White E-SEL3 Emergency	18W / 32W	2,525 / 4,475	140 lm/W	4000K	75°
430646-E3	Olton UGR 5ft Batten - White E-SEL3 Emergency	24W / 43W	3,350 / 6,025	140 lm/W	4000K	75°
430645-MW	Olton UGR 4ft Batten - White Microwave	18W / 32W	2,525 / 4,475	140 lm/W	4000K	75°
430646-MW	Olton UGR 5ft Batten - White Microwave	24W / 43W	3,350 / 6,025	140 lm/W	4000K	75°
430645-E3-MW	**Olton UGR 4ft Batten - White E-SEL3 Emergency & Microwave**	**18W / 32W**	**2,525 / 4,475**	**140 lm/W**	**4000K**	**75°**
430646-E3-MW	Olton UGR 5ft Batten - White E-SEL3 Emergency & Microwave	24W / 43W	3,350 / 6,025	140 lm/W	4000K	75°

Code suffixes: -E3 E-SEL3 emergency, 3 hour -MW Microwave sensor

DOWNLOADS

Photometric files (LDT), installation instructions and the latest datasheet are on the product page:

www.lumineux.co.uk/shop/430645-e3-mw-olton-academic-batten-4ft-18w-32w-4000k-white-ugr-e-sel3-emergency-microwave-60502

WARRANTY AND SUPPORT

5 years warranty. Terms at www.lumineux.co.uk/product-warranty-on-site-warranty.

Free lighting design and technical support: 01507 328031, support@lumineux.co.uk