LED PANEL

Wraysbury

Wraysbury Wattage Selectable Backlit Panel 1200x600

Product code **421425**

Power	**40W / 46W / 52W / 58W**
Luminous flux	**4,800 / 5,520 / 6,240 / 6,960 lm**
Efficacy	**120 lm/W**
Colour temperature	**3000K / 4000K / 6000K**
Beam angle	**95°**
Protection	**IP44**
Lifetime L70	**75,000 h**
Warranty	**5 years**



Introduction

Wattage and colour selectable, IP44, up to 120 lm/W.

Features

- 600 x 600 & 1200 x 600 Options
- 3CCT(4000K,4000K & 6000K), 4000K & 5000K Options Available
- Microprismatic TP (a) diffuser
- 5 Year Product Warranty

Certification and options

Wattage selectable

IP44
Ingress protection

<19
UGR
Low glare UGR<19

UKCA marked

CE marked

Recommended applications

Offices, classrooms, healthcare, retail

Specification

Optical

Luminous flux	**4,800 / 5,520 / 6,240 / 6,960 lm**
Efficacy	**120 lm/W**
Colour temperature	**3000K / 4000K / 6000K**
Colour selection	**3CCT**
Colour rendering	**Ra 80**
Colour consistency	**6 SDCM**
Beam angle	**95°**
Distribution	**Symmetric**
Glare (UGR)	**<19**

Construction

Ingress protection	**IP44**
Electrical class	**Class II**
Body	**Steel**
Diffuser	**Polycarbonate**
Diffuser fire rating	**TP(a)**
Colour (RAL)	**RAL 9016**
Location	**Internal**
Dimensions (L x W x H)	**1195 x 595 x 33 mm**
Weight	**4.2 kg**

Electrical

Power	**40W / 46W / 52W / 58W**
Supply voltage	**230-240V AC**
Frequency	**50 Hz / 60 Hz**
Driver type	**CC**
Driver	**Lumineux**

Installation

Mounting	**BESA/Conduit**
Ambient temperature	**-30 to +55 °C**

Lifetime and warranty

Lifetime L70	**75,000 h**
Lifetime L80	**50,000 h**
Lifetime L90	**25,000 h**
Energy class	**D**
Warranty	**5 years**
Replaceable driver	**Professional**
Replaceable light source	**No**

Values are nominal. Luminous flux and efficacy are for the complete luminaire. Specifications may change without notice; the product page always carries the latest version.

Dimensions

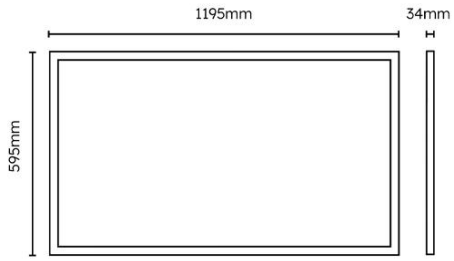

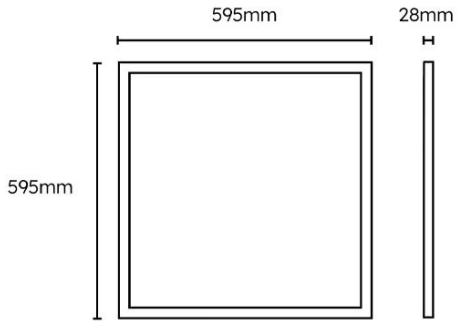

Ordering information · Wraysbury Wattage Selectable

CODE	DESCRIPTION	POWER	LUMINOUS FLUX	EFFICACY	CCT	BEAM
421424	Wraysbury Wattage Selectable Backlit Panel 600x600	18W / 23W / 28W / 34W	2,150 / 2,750 / 3,350 / 4,000	120 lm/W	3000K / 4000K / 6000K	95°
421422	Wraysbury Wattage Selectable Backlit Panel 600x600	18W / 23W / 28W / 34W	2,150 / 2,750 / 3,350 / 4,000	120 lm/W	4000K	95°
421422-MP	Wraysbury Wattage Selectable Backlit Panel 600x600	18W / 23W / 28W / 34W	2,150 / 2,750 / 3,350 / 4,000	120 lm/W	4000K	95°
421423	Wraysbury Wattage Selectable Backlit Panel 600x600	18W / 23W / 28W / 34W	2,150 / 2,750 / 3,350 / 4,000	120 lm/W	5000K	95°
421425	**Wraysbury Wattage Selectable Backlit Panel 1200x600**	**40W / 46W / 52W / 58W**	**4,800 / 5,520 / 6,240 / 6,960**	**120 lm/W**	**3000K / 4000K / 6000K**	**95°**

Compatible modules and accessories

	CODE	DESCRIPTION
	430971	Grafham 2W E-SEL3 Emergency Conversion Pack 20-55V DC 130mA LiFePO4 3.2V DC 3.2 mAh Loch4 Connector
	430147	Wraysbury Tool Free Pattress Kit 600x600x70mm

DOWNLOADS

Photometric files (LDT), installation instructions and the latest datasheet are on the product page:

www.lumineux.co.uk/shop/421425-wraysbury-backlit-panel-1200x600-40w-46w-52w-58w-3cct-white-ugr-tp-a-60976

WARRANTY AND SUPPORT

5 years warranty. Terms at www.lumineux.co.uk/product-warranty-on-site-warranty.

Free lighting design and technical support: 01507 328031, support@lumineux.co.uk